SOLAR ELECTRIC

KOSTAL

Smart connections.

Operating manual

PIKO IQ

Legal notice

KOSTAL Solar Electric GmbH
Hanferstraße 6
79108 Freiburg i. Br.
Germany
Phone +49 (0)761 477 44 - 100
Fax +49 (0)761 477 44 - 111
www.kostal-solar-electric.com

Exclusion of liability

All names, trademarks, product names or other designations used in this manual may be legally protected even if not indicated as such (e.g. as a trademark). KOSTAL Solar Electric GmbH assumes no liability or warranty for their free usage. The illustrations and texts have been compiled with great care. However, the possibility of errors cannot be ruled out. The compilation is made without any guarantee.

General note on gender equality

KOSTAL Solar Electric GmbH is aware of the importance of language with regard to the equality of women and men and always makes an effort to reflect this in the documentation. Nevertheless, for the sake of readability we are unable to use non-gender-specific terms throughout and use the masculine form instead.

© 2019 KOSTAL Solar Electric GmbH

All rights reserved by KOSTAL Solar Electric GmbH, including those of reproduction by photocopy and storage in electronic media. Commercial use or distribution of the texts, displayed models, diagrams and photographs appearing in this product, is not permitted. This manual may not be reproduced, stored, transmitted or translated in any form or by means of any medium, in whole or in part, without prior written permission.

User Interface (UI) as of: 01.05.0000

Firmware (FW): 1.4

Contents

1. General information 6
1.1 Proper use ... 8
1.2 EU declarations of conformity ... 11
1.3 About this manual ... 12
1.4 Notes in this manual ... 14
1.5 Symbols used ... 18
1.6 Labels on the inverter ... 19

2. Device and system description 20
2.1 The photovoltaic system ... 21
2.2 The inverter ... 22
2.3 Functions ... 28

3. Installation 38
3.1 Transport and storage ... 39
3.2 Scope of delivery ... 40
3.3 Installation ... 41
3.4 Electrical connection ... 44
3.5 Overview of Smart Communication Board (SCB) ... 48
3.6 Connecting energy meter ... 49
3.7 Connecting the ripple control receiver ... 52
3.8 Connection for self-consumers ... 55
3.9 Communication connection ... 56
3.10 Closing the inverter ... 58
3.11 Connection of solar module ... 59
3.12 Initial commissioning ... 62
3.13 Making settings in the Webserver ... 66

4. Operation and operating the device 67
4.1 Switching on the inverter ... 68
4.2 Switching off the inverter ... 69
4.3 De-energising the inverter ... 70
4.4 Control panel ... 72
4.5 Operational status (display) ... 75
4.6 Operational status (LEDs) ... 78
4.7 The menu structure of the inverter ... 79

© 2020 KOSTAL Solar Electric GmbH

5. Connection types 93
5.1 Connecting the inverter and computer ... 94
5.2 Settings on the computer ... 95
5.3 Connecting the inverter and computer ... 96
5.4 Disconnecting the inverter from the computer ... 98
5.5 Connection via KOSTAL Solar App ... 99

6. Webserver 100
6.1 The Webserver ... 101
6.2 Calling up the Webserver ... 103
6.3 Menu structure of Webserver ... 105
6.4 Webserver menus ... 110

7. System monitoring 133
7.1 The log data ... 134
7.2 Retrieving, saving and graphically depicting log data ... 138
7.3 The KOSTAL (PIKO) Solar Portal ... 140
7.4 Remote service ... 141

8. Active power control 142
8.1 Why active power control? ... 143
8.2 Limitation of the PV feed-in capacity ... 144
8.3 Active power control with a ripple control receiver ... 145
8.4 Active power control using smart measuring systems ... 148

9. Self-consumption 151
9.1 Self-consumption overview ... 152
9.2 Electrical connection for self-consumption ... 153
9.3 Setting up self-consumption control ... 155

10. Maintenance 162
10.1 Maintenance and cleaning ... 163
10.2 Housing cleaning ... 164
10.3 Fan cleaning ... 165
10.4 Updating software ... 169
10.5 Event codes ... 171

© 2020 KOSTAL Solar Electric GmbH

11. Technical data **179**
11.1 Technical data 180
11.2 Block diagram 185

12. Accessories **186**
12.1 KOSTAL (PIKO) Solar Portal 187
12.2 KOSTAL Solar App 188
12.3 PIKO M2M Service 189

13. Appendix **190**
13.1 Type plate 191
13.2 Warranty and service 192
13.3 Handover to the operator 193
13.4 Decommissioning and disposal 194

Index **195**

© 2020 KOSTAL Solar Electric GmbH

1. General information

1.1 Proper use 8

1.2 EU declarations of conformity 11

1.3 About this manual 12

1.4 Notes in this manual 14

1.5 Symbols used 18

1.6 Labels on the inverter 19

© 2020 KOSTAL Solar Electric GmbH

Thank you for choosing an inverter from KOSTAL Solar Electric GmbH! We hope you enjoy consistently high energy yields with the inverter and your photovoltaic system.

If you have any technical questions, please call our service hotline:

- Germany and other countries[1]
  +49 (0)761 477 44 - 222
- Switzerland
  +41 32 5800 225
- France, Belgium, Luxembourg
  +33 16138 4117
- Greece
  +30 2310 477 555
- Italy
  +39 011 97 82 420
- Spain, Portugal[2]
  +34 961 824 927
- Turkey[3]
  +90 212 803 06 26

[1] Language: German, English

[2] Language: Spanish, English

[3] Language: English, Turkish

© 2020 KOSTAL Solar Electric GmbH

1.1 Proper use

The inverter converts direct current into alternating current. This can be used as follows:

- For self-consumption
- For feed-in into the public grid

The device may only be used in grid-connected photovoltaic systems within the permissible power range and under the permissible ambient conditions. The device is not intended for mobile use.

Inappropriate use may lead to injury or even death for the user or third parties. Material damage to the device and other equipment can also occur. The inverter may therefore only be used for its intended purpose.

All components fitted on the inverter or in the PV system must satisfy the standards and guidelines that apply in the country of installation.

© 2020 KOSTAL Solar Electric GmbH

Exclusion of liability

Any use that differs from that described in **Ch. 1.1** or goes beyond the stated intended purpose, is considered inappropriate. The manufacturer accepts no liability for any damage resulting from this. Modifications to the inverter are prohibited. The inverter may only be used if it is safe to operate and is in a technically perfect condition. Any instance of misuse will result in the termination of the warranty, guarantee and general liability of the manufacturer.

Only a qualified electrician may open the device. The inverter must be installed by a trained electrician (according to DIN VDE 1000-10 or BGV A3 accident prevention regulations or an internationally comparable standard) who is responsible for observing the applicable standards and regulations.

Work that could affect the electrical power system of the relevant energy supply company at the site of the solar power feed-in, may only be carried out by qualified electricians expressly authorised (licensed) by the energy supply company. This includes changes to the factory-preset parameters. The installer must always observe the regulations of the energy supply company.

Factory settings may only be changed by qualified electrical installers or persons with at least comparable or higher technical qualifications, e.g. foremen, technicians or engineers. When doing so, all requirements are to be observed.

IMPORTANT INFORMATION

The inverter may only be installed, maintained and repaired by a trained and qualified electrician.

The electrician is responsible for ensuring that the applicable standards and regulations are observed and implemented. Work that could affect the electrical power system of the relevant energy supply company at the site of the solar power feed-in, may only be carried out by qualified electricians expressly authorised (licensed) by the energy supply company.

This includes changes to the factory-preset parameters.

© 2020 KOSTAL Solar Electric GmbH

Open Source licence

This product contains Open Source software, developed by third parties and licensed using vehicles including GPL and/or LGPL.

For more details of this, a list of the Open Source software used and the related licence texts, go to the Licences section on the inverter's website (Webserver) **Ch. 6**.

© 2020 KOSTAL Solar Electric GmbH

1.2 EU declarations of conformity

KOSTAL Solar Electric GmbH hereby declares that the inverter described in this document complies with the basic requirements and other relevant conditions of the directives listed below.

- Directive 2014/30/EU
  (on the approximation of the laws of the Member States relating to electromagnetic compatibility (EMC))
- Directive 2014/35/EU
  (on the harmonisation of the laws of the Member States relating to the making available on the market of electrical equipment designed for use within certain voltage limits – in short: Low Voltage Directive)
- Directive 2011/65/EU
  (RoHS) on the restriction of the use of certain hazardous substances in electrical and electronic equipment

You will find a detailed EU Declaration of Conformity in the download area at:

www.kostal-solar-electric.com

© 2020 KOSTAL Solar Electric GmbH

1.3 About this manual

Read this manual carefully in its entirety.

It contains important information on the installation and operation of the inverter. Pay particular attention to the instructions regarding safe usage. KOSTAL Solar Electric GmbH assumes no liability for damages arising from the non-observance of this manual.

This manual is an integral part of the product. It applies exclusively to the inverters from KOSTAL Solar Electric GmbH. Keep this manual and give it to the new owner should you pass it onto a new operator.

The installer and the operator must have unrestricted access to these instructions at all times. The installer must be familiar with this manual and follow all instructions.

The most recent version of the operating manual for your product is available in the download area at www.kostal-solar-electric.com.

Target group

This manual is intended for trained and qualified electrical technicians who install, maintain and repair the inverters.

The inverters described in this manual differ from one another in terms of particular technical details. Information and handling instructions that only apply to certain device types, are to be identified accordingly.

Information concerning your safety or that of the unit is specifically noted.

© 2020 KOSTAL Solar Electric GmbH

Navigation through the document

In order to enable navigation through this document, it contains clickable areas.

One of these is the navigation bar in the header of each page. Here you can go to the overview pages of the individual chapters in one click.

The table of contents can also be used in this way: From the index at the beginning of each chapter you can go to the indicated sub-chapter in one click.

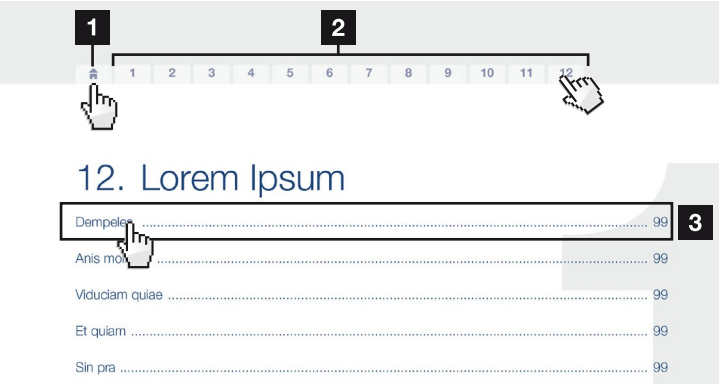

Fig. 1: Navigation through the document

1. Calling up the main table of contents
2. Navigation bar
3. Tables of contents

You can navigate to the referenced points in the document within the instruction text using the cross-references.

Ch. 1

Fig. 1, It. 2

Fig. 2: Examples of cross-references

© 2020 KOSTAL Solar Electric GmbH

1.4 Notes in this manual

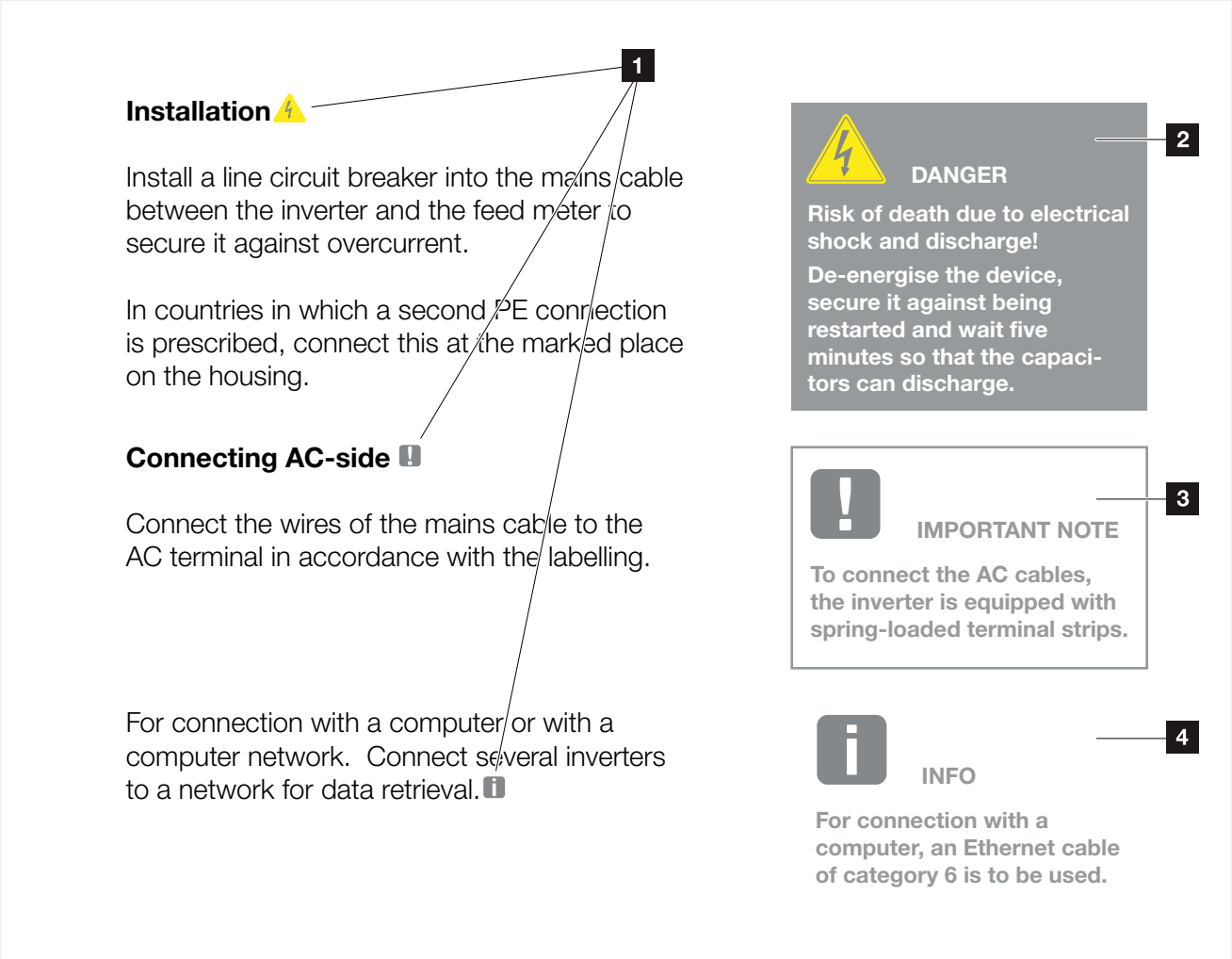

Fig. 3: Safety instructions in this manual

1. Reference icon within the instruction text
2. Warning
3. Information note
4. Other notes

Notes have been incorporated into the instruction text. A differentiation is made in this manual between warnings and information notes. All notes are identified in the text line with an icon.

© 2020 KOSTAL Solar Electric GmbH

Warnings

The warnings refer to life-threatening dangers. Serious injuries possibly resulting in death may occur.

Each warning consists of the following elements:

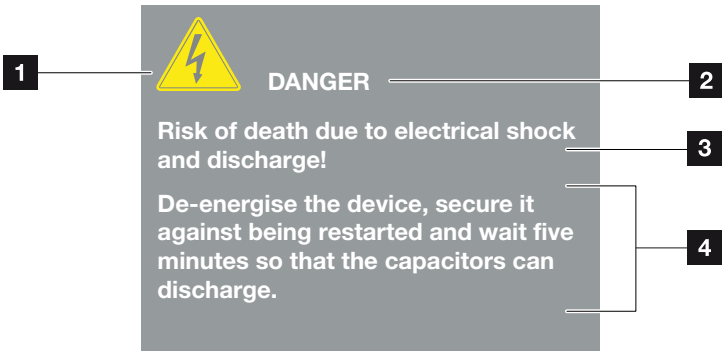

Fig. 4: Structure of the warnings

1. Warning symbol
2. Signal word
3. Type of danger
4. Corrective actions

Warning symbols

Danger

Danger due to electrical shock and discharge

Danger due to burns

© 2020 KOSTAL Solar Electric GmbH

Signal words

Signal words are used to identify the severity of the danger.

DANGER
Indicates a direct hazard with a high level of risk, which, when it is not avoided, may result in death or serious injury.

WARNING
Indicates a hazard with a moderate level of risk, which, when it is not avoided, may result in death or serious injury.

CAUTION
Indicates a hazard with a low level of risk, which, when it is not avoided, may result in minor or slight injury or property damage.

Information notes

Information notes contain important instructions for the installation and problem-free operation of the inverter. These must be followed at all times. The information notes also point out that failure to observe can result in damage to property or financial damages.

IMPORTANT INFORMATION

The inverter may only be installed, operated, maintained and repaired by trained and qualified staff.

Fig. 5: Example of an information note

© 2020 KOSTAL Solar Electric GmbH

Symbols within the information notes

Important information

Damage to property possible

Other notes

They contain additional information or tips.

INFO

This is additional information.

Fig. 6: Example of an information note

Symbols within the additional notes

Information or tip

Enlarged view

© 2020 KOSTAL Solar Electric GmbH

1.5 Symbols used

Symbol	Meaning
1., 2., 3. ...	Sequential steps in a handling instruction
→	Effect of a handling instruction
✓	Final result of a handling instruction
↗	Cross-reference to other places in the document or to other documents
■	List

Tab. 1: Symbols and icons used

Abbreviations used

Abbreviation	Explanation
Tab.	Table
Fig.	Figure
It.	Item
Ch.	Chapter

© 2020 KOSTAL Solar Electric GmbH

1.6 Labels on the inverter

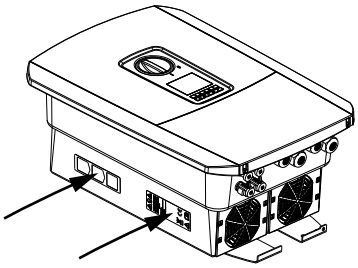

Signs and labels are applied to the housing of the inverter. These signs and labels may not be altered or removed.

Symbol	Explanation
	Danger due to electrical shock and discharge
	Danger due to burns
	Danger notice
5 min	Danger due to electrical shock and discharge. Wait five minutes (discharge time of the capacitors) after shut-down
	Additional earth connection
	Observe and read operating manual
	Device may not be disposed of with household waste. Observe the local application of disposal requirements
CE	CE marking The product satisfies the applicable EU requirements

© 2020 KOSTAL Solar Electric GmbH

2. Device and system description

2.1 The photovoltaic system 21

2.2 The inverter 22

2.3 Functions 28

2.1 The photovoltaic system

Inverter with 2 PV inputs

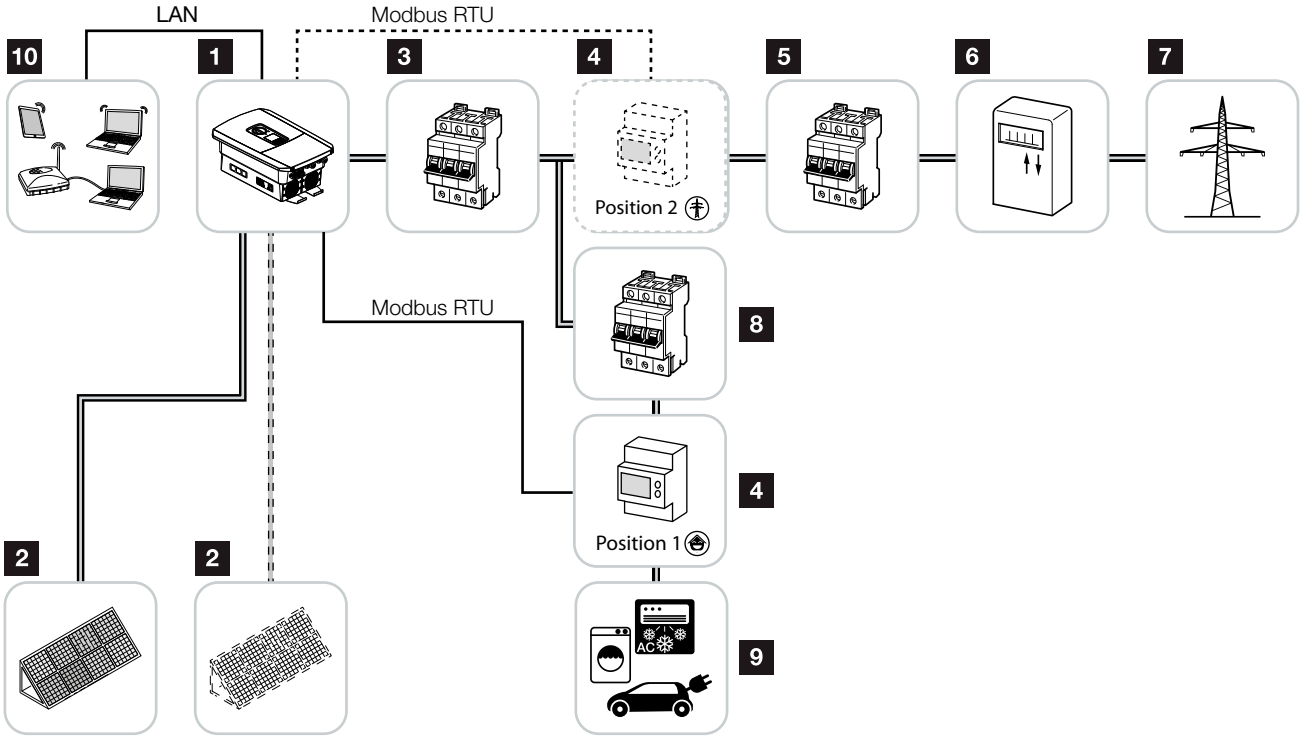

Fig. 7: Photovoltaic system with 3 PV inputs

1 Inverter
2 PV generators (number depends on the type)
3 Line circuit breaker for inverter
4 Digital energy meter (Modbus RTU)
5 Main fuse building
6 Feed-in procurement meter or smart meter (not in all countries)
7 Public grid
8 Line circuit breaker for energy consumers
9 Energy consumers
10 Communication link for inverter

2.2 The inverter

Exterior view of the inverter

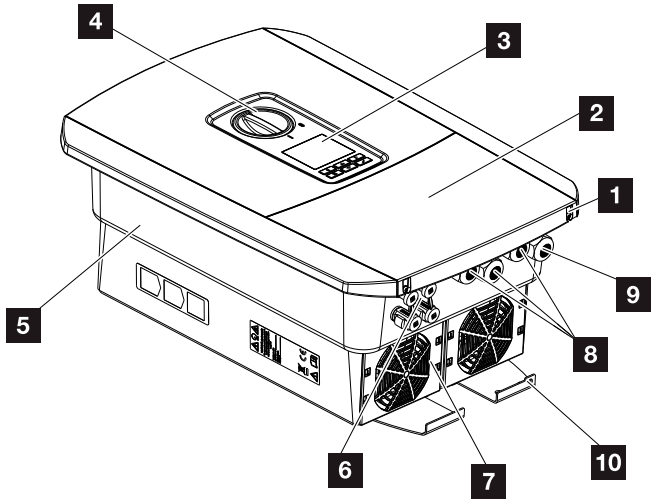

Fig. 8: Inverter (exterior view)

1. Cover screws
2. Cover (terminal compartment)
3. Display
4. DC switch
5. Housing
6. Plug connectors for connecting the PV generators
7. Fan
8. Cable openings for communication
9. Cable opening for mains cable
10. Additional PE connection, outside

DC switch on the inverter

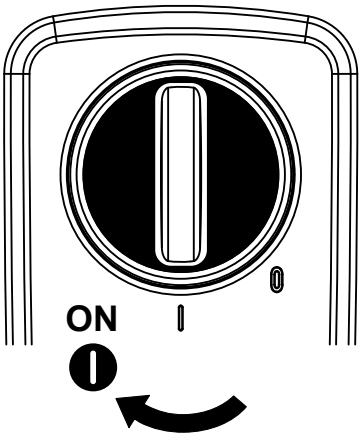

Fig. 9: DC switch ON

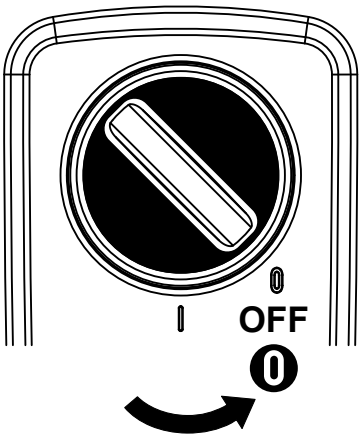

Fig. 10: DC switch OFF

The terminal compartment

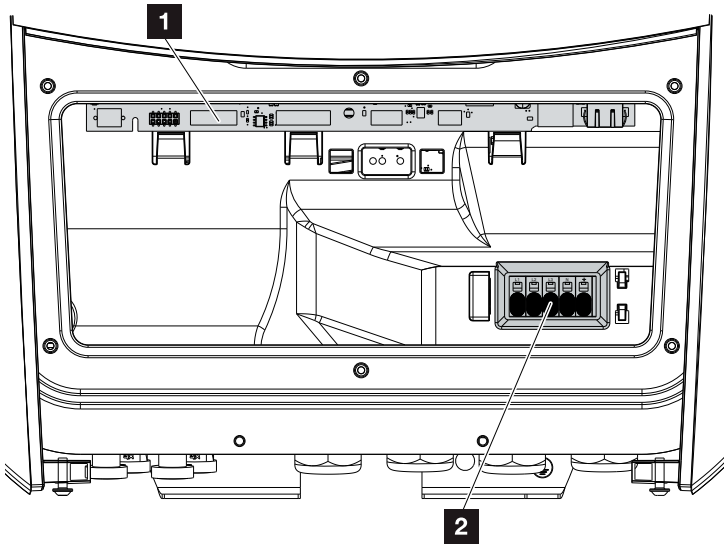

Fig. 11: Inverter (interior view)

1 Smart Communication Board (SCB)
2 AC terminal

Smart Communication Board (SCB)

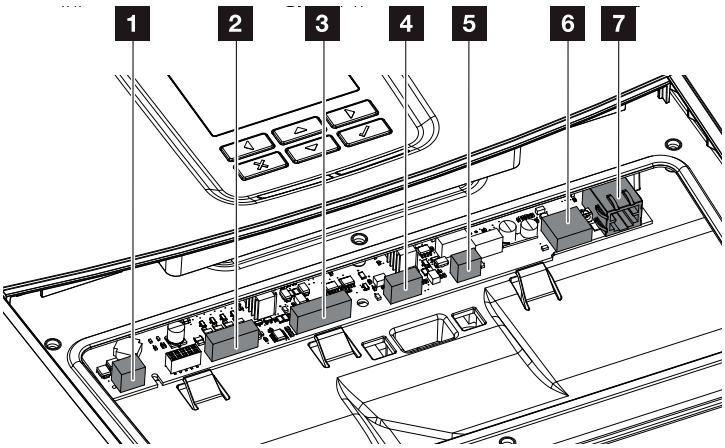

Inverter (interior view)

1. Terminal for self-consumption control (connection of consumers via external load relay)
2. Terminal for digital interface for ripple control receiver
3. Not used
4. Not used
5. Terminal for digital energy meter (Modbus RTU master)
6. USB 2.0 port
7. Ethernet connection (RJ45) LAN

The Smart Communication Board (SCB) is the inverter's communication hub. All the connections for communicating with other components can be found on the SCB.

The control panel

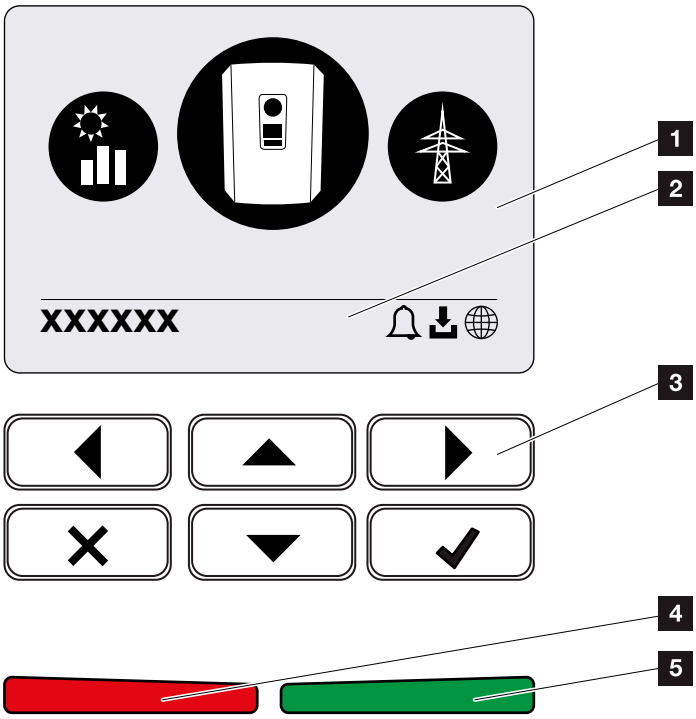

Fig. 12: Control panel

1. Display
2. Status line, alternating
   (inverter status, event code, IP address, status of solar portal connection, updates available, events)
3. Control buttons
4. Red status LED for events
5. Green status LED for feed-in mode

Adjustments can be made and data retrieved via the control panel.

The inverter menus

The inverter provides the following menu items for querying statuses and configuring the inverter:

Symbol	Function
	PV power status query
	Status query for AC feed-in power and grid parameters of public grid
	Home consumption status query
	Inverter configuration

Tab. 2: Inverter menus

INFO

Depending on software versions (UI version), there may be deviations.

2.3 Functions

Energy management system

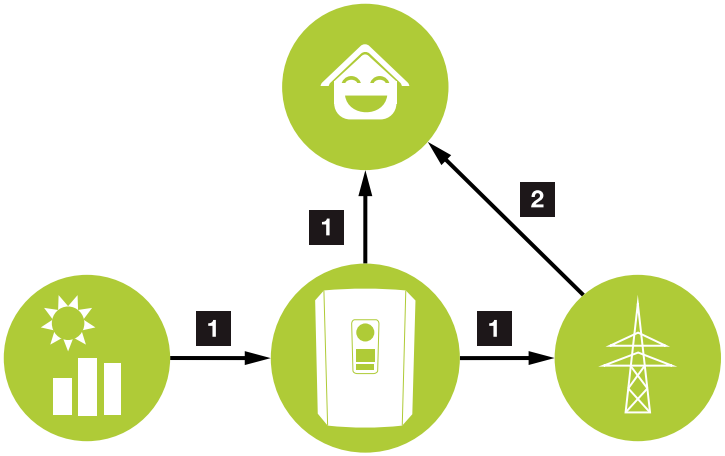

Fig. 13: Control and distribution of the energy flows

1 PV energy:
Consumption via local consumers
Feed-in to the public grid

2 Grid energy:
Consumption via local consumers

The energy management system (EMS) controls the distribution of the energy between the DC side (PV generator) and the AC side (building grid, public grid). For this purpose, the EMS checks for the presence of consumption in the internal home network. The logic of the EMS then calculates and controls the optimal usage of PV energy. Priority is given to use by self-consumers of the PV energy generated. The remaining generated PV energy is fed into the grid and remunerated.

Recording home consumption

Connecting up an external energy meter (via Modbus RTU) enables the inverter to monitor the flow of energy in the home for 24 hours and to control it in an optimum manner.

The generated PV energy is primarily used for consumers (such as light, washing machine or television). The energy generated in excess of this is fed into the public grid.

For more information **Ch. 3.6**.

- Using energy meter (Modbus RTU) to record home consumption
- 24-hour measurement
- Various types of energy meter can be used

INFO

You will find a list of the approved energy meters on our homepage, in the download area for the product.

Shadow management

If a connected PV string is subjected to partial shading, e.g. caused by other parts of a building, trees or power lines, the entire PV string no longer achieves its optimum performance. The PV modules affected behave like a bottleneck and thereby prevent better performance.

The intelligent shadow management integrated in the inverter now adapts the MPP tracker of the selected string so that the PV string can always deliver optimum performance in spite of partial shading.

Shadow management can be activated via the Web-server. **Ch. 6**

Communication

The inverter provides various interfaces for communication purposes. These establish a connection to other inverters, sensors, energy meters or a link to the Internet.

- LAN
  LAN connects the inverter to the local home network via which it can then access the Internet and solar portal.
- RS485/Modbus (RTU)
  Energy meters are connected to the Modbus interface and record the flow of energy within the house.

Secure communication

These days, secure data transfer is an important element of all devices linked to the Internet. All the data transferred externally from the inverter is of course only transferred in an encrypted manner.

- Security concept
  Encrypted transfer of data to the solar portal
- Data encryption in line with AES and SSL standards

Ripple control receiver / smart meter

As of a certain system size, which may vary from one country to the next, use of a ripple control receiver is mandatory. In some instances, the energy provider also requires a smart meter to be installed.

Contact your energy provider for more information.

If a smart meter gateway is fitted in your house installation, the inverter can be connected to the Smart Meter Gateway using a control box. The control box is connected to the inverter like a ripple control receiver.

- Connection facility for ripple control receivers
- Connection facility for a control box for communicating with a Smart Meter Gateway

For more information **Ch. 8**.

Self-consumption control

To make the best possible use of the PV energy generated, self-consumption should be prioritised. To do this, the inverter allows consumers to be connected to it via an external relay. The consumers can then be switched on when there is sufficient PV power and thereby access the PV energy generated at that point in time.

For more information **Ch. 9**.

The Webserver

The Webserver is the graphic interface for how information is displayed in the browser (e.g. Firefox, Internet Explorer or Google Chrome) for querying and configuring the inverter.

The Webserver provides the following functions:

- Logging into the inverter
- Querying the inverter status
- Current yield values of PV generators
- Current consumption values
- Current values of grid connection (e.g. feed-in, purchase)
- Statistics
- Use of the self-consumption terminal
- Displaying log data
- Displaying inverter versions (e.g. UI, FW, HW)
- Configuring the inverter (e.g. software update, releasing options, making inverter settings which have been specified by the energy provider etc.)

For more information **Ch. 6**.

The data logger

A data logger is integrated in the inverter. The data logger is a data storage system, which collects and stores the yield and performance data of the inverter and the storage system. Yield data (saving interval) is saved every 5 minutes.

Saving interval	Saving time
5 minutes	Max. 365 days

Tab. 3: Saving intervals of data logger

For more information **Ch. 7**.

INFO

Once the storage time has expired, the oldest data is always deleted.

For long-term backup, the data must be backed up with a PC or sent to a solar portal.

KOSTAL (PIKO) Solar Portal

The KOSTAL (PIKO) Solar Portal protects your investment in a PV system against yield loss, e.g. through active e-mail alerts of events.

You can log into the KOSTAL (PIKO) Solar Portal for free at **www.kostal-solar-portal.com**.

Functions include:

- Worldwide online access to the portal
- Graphic representation of the power and yield data
- Visualisation of data and thus being made aware of how to optimise self-consumption
- Notification of events by e-mail
- Data export
- Sensor evaluation
- Display and proof of a potential active power reduction by the grid operator
- Storage of log data for long-term and reliable monitoring of your PV system
- Provision of system data for the KOSTAL Solar App

You can find more information about this product on our website **www.kostal-solar-electric.com**.

Event codes

Should an event or fault occur during operation, it is indicated on the inverter display and stored in the inverter and solar portal (only if connected).

For more information **Ch. 10.5**.

Service concept

The inverter includes smart monitoring. Should an event occur during operation, an event code for this is shown in the display.

As the operator of the system, in the event of a service call-out, you can then read out the message and obtain assistance from your installer or service partner.

For more information **Ch. 7.4**.

KOSTAL Solar Plan configuration software

Our free KOSTAL Solar Plan software simplifies the inverter layout process.

Just enter the system data and individual customer data and receive a recommendation for a KOSTAL inverter tailored to the solar system you are planning. All KOSTAL inverters are considered for this. The customer's power consumption is also considered and, using standard load profiles, the potential for self-consumption and self-sufficiency is indicated.

The KOSTAL Solar Plan covers the following areas of inverter layout:

- Rapid layout
  Manual inverter layout taking account of the inverter specifications
- Layout
  Automatic inverter layout with the option of taking power consumption into account
- Storage layout
  Automatic battery inverter layout with the option of taking power consumption into account

Alongside enhanced inverter layout, KOSTAL Solar Plan also helps you to produce quotations. Customer, project and installer data is added to the technical data entered by the user, then included with the quotation as a PDF overview. What's more, the planning data can also be saved in a project file and edited if required.

You can find more information about this product on our website **www.kostal-solar-electric.com**.

3. Installation

3.1 Transport and storage 39

3.2 Scope of delivery 40

3.3 Installation 41

3.4 Electrical connection 44

3.5 Overview of Smart Communication Board (SCB) 48

3.6 Connecting energy meter 49

3.7 Connecting the ripple control receiver 52

3.8 Connection for self-consumers 55

3.9 Communication connection 56

3.10 Closing the inverter 58

3.11 Connection of solar module 59

3.12 Initial commissioning 62

3.13 Making settings in the Webserver 66

© 2020 KOSTAL Solar Electric GmbH

3.1 Transport and storage

The function of the inverter has been tested and it has been carefully packaged prior to delivery. Upon receipt, check the delivery for completeness and any transport damage.

Complaints and damage claims are to be directly addressed to the shipping company.

If stored for a longer period before installation, all inverter components must be kept dry and dust-free in the original packaging.

DAMAGE POSSIBLE

Potential risk of damage when putting down the inverter. Whenever possible, place the inverter on its back after unpacking.

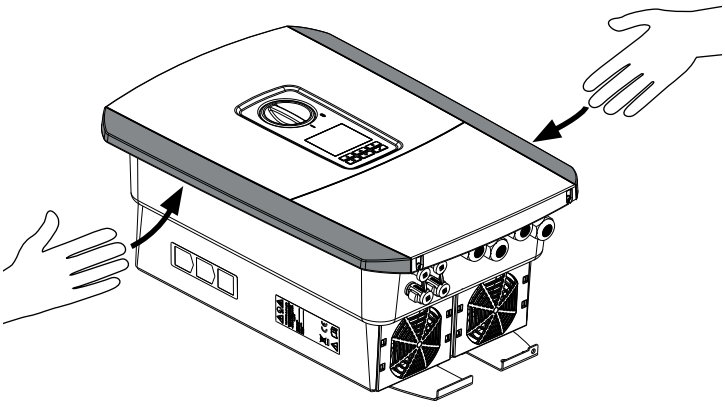

Fig. 14: Grip strips on inverter

For enhanced inverter transport, use the grip strips on the left and right side of the inverter.

© 2020 KOSTAL Solar Electric GmbH

3.2 Scope of delivery

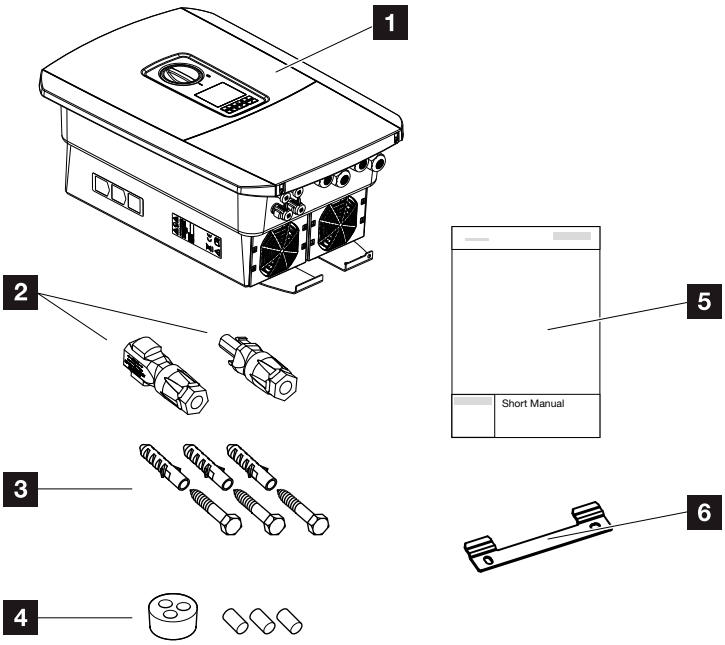

Fig. 15: Scope of delivery

The packaging contains:

1. Inverter
2. DC plug connector
   (each DC input: 1× plug, 1× socket)
3. Plug seals for screw connection of network cable
4. 3 x screws 6x45 with S8 screw anchors
5. Short manual
6. Wall mount

© 2020 KOSTAL Solar Electric GmbH

3.3 Installation

Selecting the installation site

Protect inverter against exposure to direct sunlight.

Protect inverter from rain and splash water.

Protect inverter from falling parts which could enter the inverter's ventilation openings.

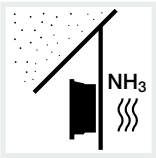

Protect the inverter against dust, contamination and ammonia gases. Rooms and areas containing livestock are not permitted as installation sites.

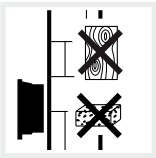

Mount inverter on a stable installation surface that can safely bear the weight. Plasterboard walls and wood planking are not permitted.

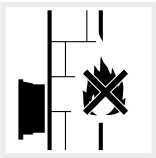

Mount inverter on a non-flammable installation surface.

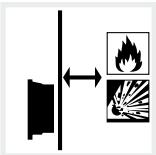

A sufficient safety distance from flammable materials and potentially explosive areas in the vicinity must be ensured.

IMPORTANT INFORMATION

Observe these instructions when selecting the installation site. Guarantee claims may be restricted or become entirely null and void in the event of failure to observe.

WARNING

RISK OF BURNS FROM HOT PARTS ON THE INVERTER!

Some of the inverter components can reach temperatures of over 80°C during operation. Select the installation site in accordance with the information provided in these instructions. Always keep the ventilation openings clear.

© 2020 KOSTAL Solar Electric GmbH

Inverters can cause noise when in operation. Install inverter in such a way that people are not disturbed by operation noises.

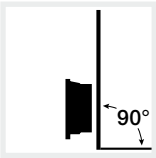

Mount inverters on vertical installation surfaces.

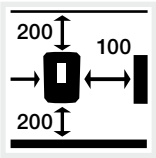

Maintain minimum distances and the necessary clearance.

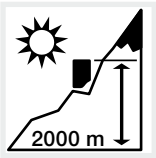

Inverter may only be installed up to an altitude of 2000 m.

The ambient temperature must be between -20 °C and +60 °C.

The air humidity must be between 4% and 100% (condensing).

Install inverters so that they are not accessible to children.

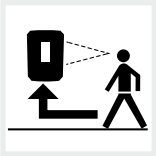

Inverters must be easily accessible and the display clearly legible.

© 2020 KOSTAL Solar Electric GmbH

Wall mounting

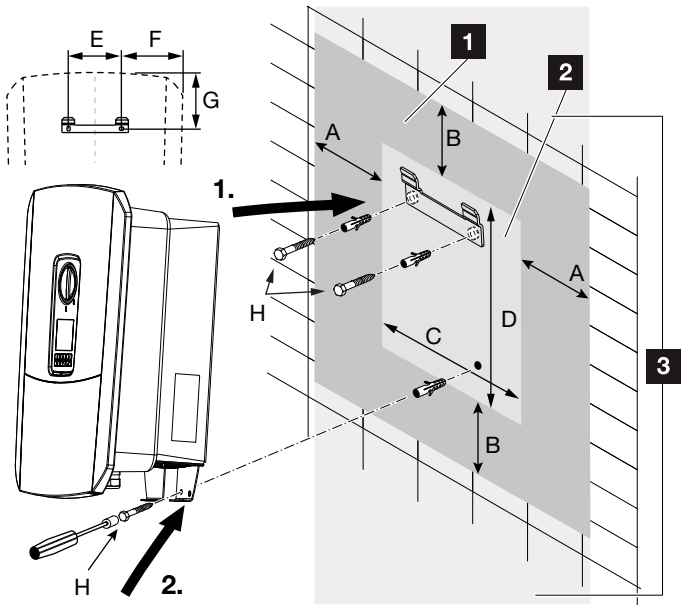

Fig. 16: Wall mounting with wall mount

1. Clearance
2. Outer dimensions of the inverter
3. Inverters may not be installed in this area

You can find the distances for wall mounting in the following table:

Dimensions in mm (inch)							
A	B	C	D	E	F	G	H
100 (3.9)	200 (7.9)	405 (15.94)	563 (22.17)	122 (4.8)	141 (5.55)	128 (5.04)	min. DIN571 A2-70 6x45

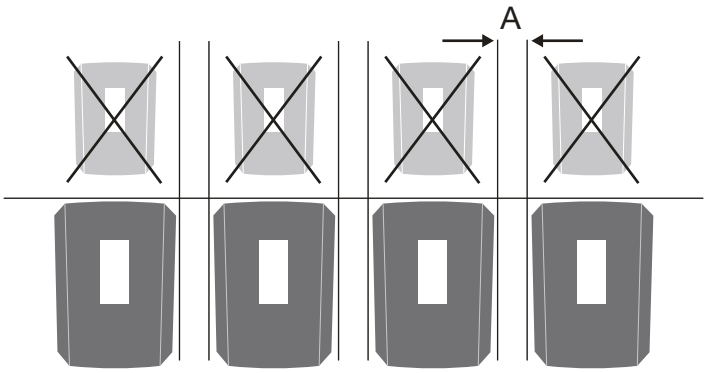

Fig. 17: Wall mounting of several inverters

IMPORTANT INFORMATION

Be absolutely sure to maintain the clearance around the inverter in order that the inverter remains cool.

IMPORTANT INFORMATION

To install the inverter, use the wall mount with 2 retaining bolts (included in scope of delivery) suitable for the existing base.

Fix the inverter to the wall at the bottom using a 3rd bolt (included in scope of delivery).

© 2020 KOSTAL Solar Electric GmbH

3.4 Electrical connection

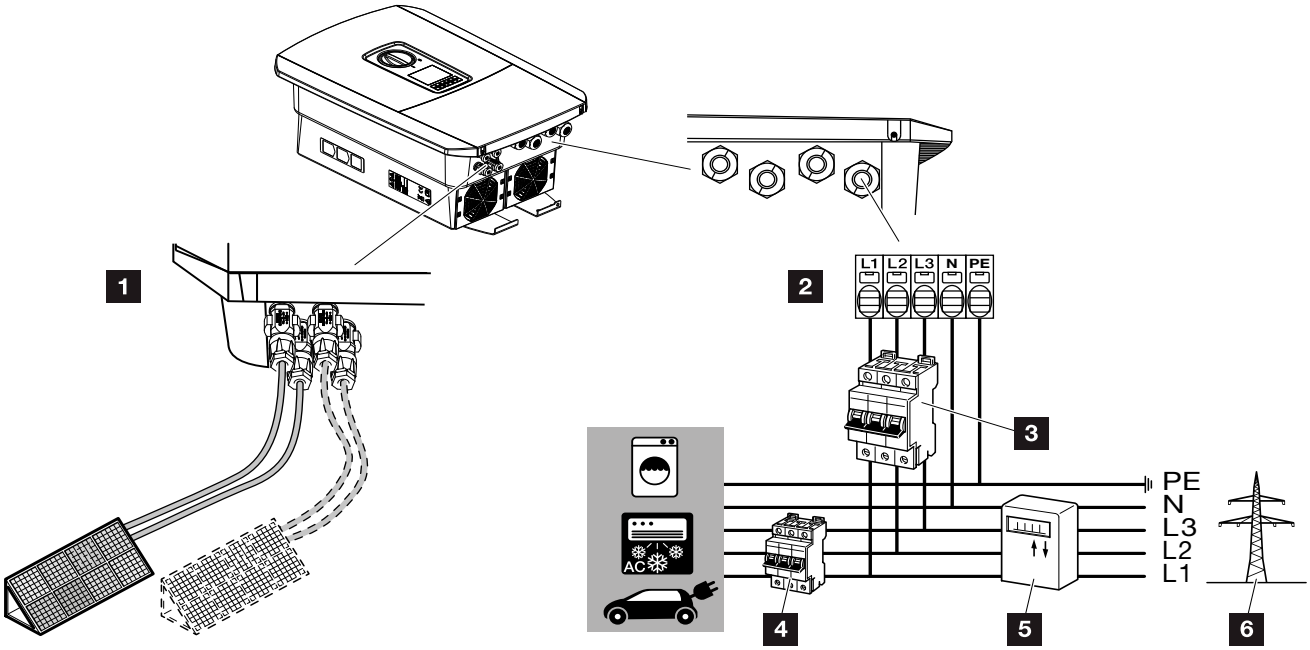

Fig. 18: Overview of electrical connections

Inverter connections

1 DC connections
2 AC terminal !

External connections !

3 Line circuit breaker for inverter
4 Line circuit breaker for consumers
5 Energy meter
6 Public grid

IMPORTANT INFORMATION

It must be ensured that the phases of the AC terminal and the phases in the home network are assigned uniformly.

IMPORTANT INFORMATION

A type A RCD ≥300 mA can be used on the AC side as residual current protection equipment (RCD). Compatibility with a type A RCD is set in the Webserver by going to Service menu > External hardware settings > Residual current protection equipment. (Default setting: compatible with type A RCD).

© 2020 KOSTAL Solar Electric GmbH

Connecting mains cable

1. De-energise the home network.
2. Secure home fuses against reactivation.
3. Move DC switch on inverter to “Off” position.
   Fig. 10
4. Remove screws on bottom cover and take off cover.

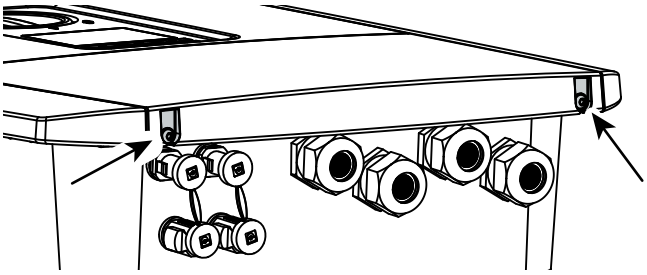

Fig. 19: Taking off cover

5. Remove screws of terminal compartment and take off cover.

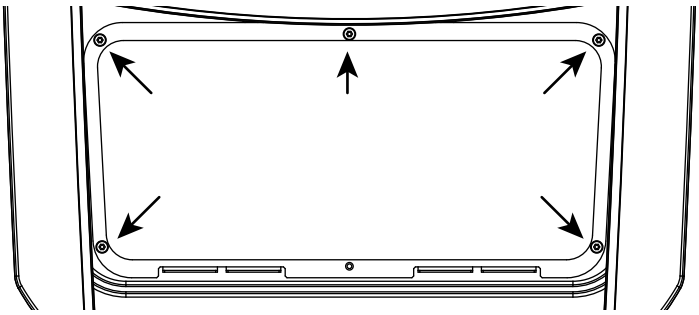

Fig. 20: Taking off terminal compartment cover

DANGER

RISK OF DEATH DUE TO ELECTRICAL SHOCK AND DISCHARGE!

De-energise all devices and secure against being switched on again.

IMPORTANT INFORMATION

Whenever working inside the inverter, only ever use insulated tools to prevent short-circuits.

© 2020 KOSTAL Solar Electric GmbH

6. Correctly lay the mains cable from the power distributor to the inverter. !

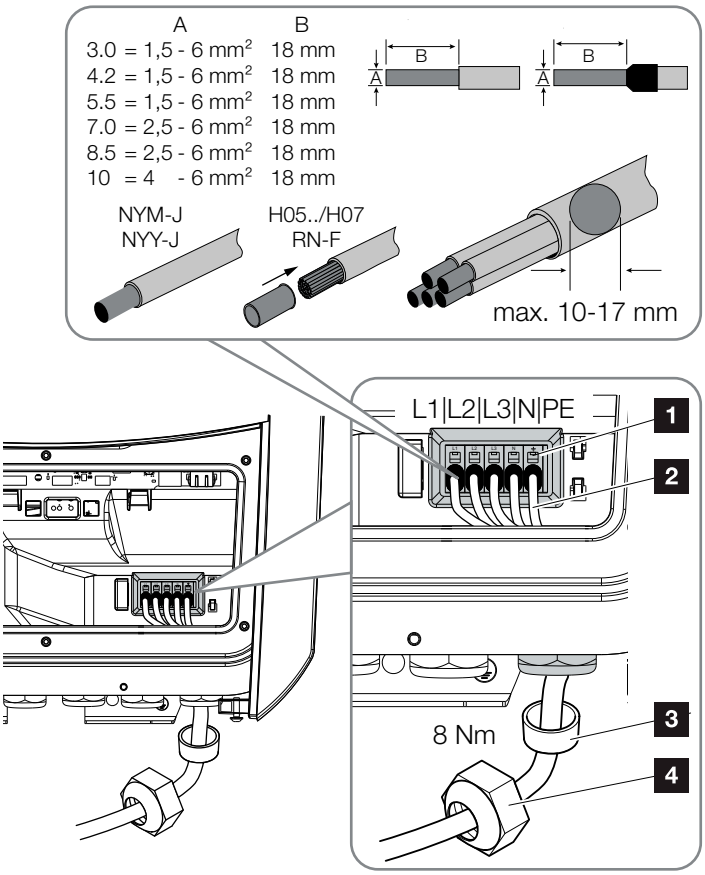

Fig. 21: Connecting mains cable to the inverter

1 AC terminal
2 Mains cable
3 Sealing ring
4 Union nut

7. Insert mains cable into the inverter and seal with sealing ring and union nut. Tighten union nut to the prescribed torque. Torques: 8 Nm (M25).

8. When threaded connections are not used, leave the sealing ring in the threaded connections.

IMPORTANT INFORMATION

See the "Technical Data" chapter for the dimensioning of the required AC line circuit breaker.
Ch. 11.1

Single-wire cables (type NYY-J or NYM-J) without core end sleeves can be used with the AC terminal.

When using cables with fine wires (type H05../H07RN-F), core end sleeves should be used. Ensure that there is a contact surface of 18 mm.

© 2020 KOSTAL Solar Electric GmbH

9. Connect the wires of the mains cable to the AC terminal in accordance with the labelling.
   Fig. 21, It. 1

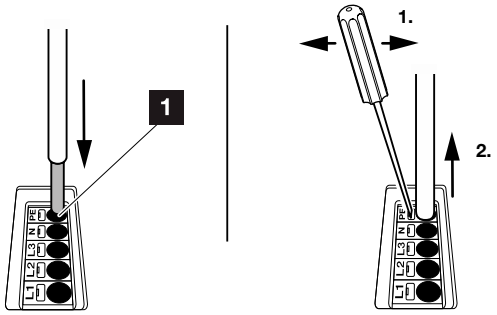

Fig. 22: Spring-loaded terminal strip

Install a line circuit breaker into the mains cable between the inverter and the feed meter to secure it against overcurrent.

10. In countries in which a second PE connection is prescribed, connect this at the marked place on the housing (outside). **Fig. 23, It. 1**

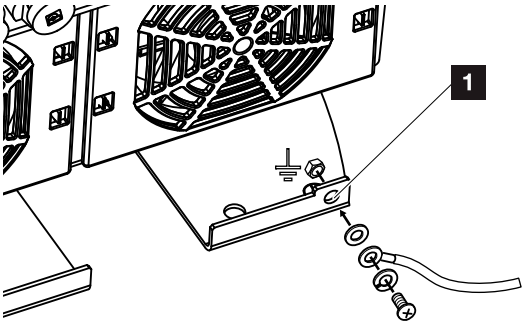

Fig. 23: Country-specific PE connection, outside

✓ The AC connection is connected.

IMPORTANT INFORMATION

To connect the AC cables, the inverter is equipped with spring-loaded terminal strips. The wires should be inserted into the large round openings (It. 1) of the terminal. The wire stripping length is 18 mm. Core end sleeves should be used with stranded cables.

WARNING

RISK OF FIRE DUE TO OVERCURRENT AND HEATING OF THE MAINS CABLE!

Install line circuit breaker to secure against overcurrent.

IMPORTANT INFORMATION

This product may generate a direct current in the outer protective earthing conductor. A type A or B RCD ≥300 mA can be used on the AC side as residual current protection equipment (RCD). Use of a type A RCD is approved in the Webserver by going to Service menu > External hardware settings > Residual current protection equipment. (Default setting: type A RCD released).

© 2020 KOSTAL Solar Electric GmbH

3.5 Overview of Smart Communication Board (SCB)

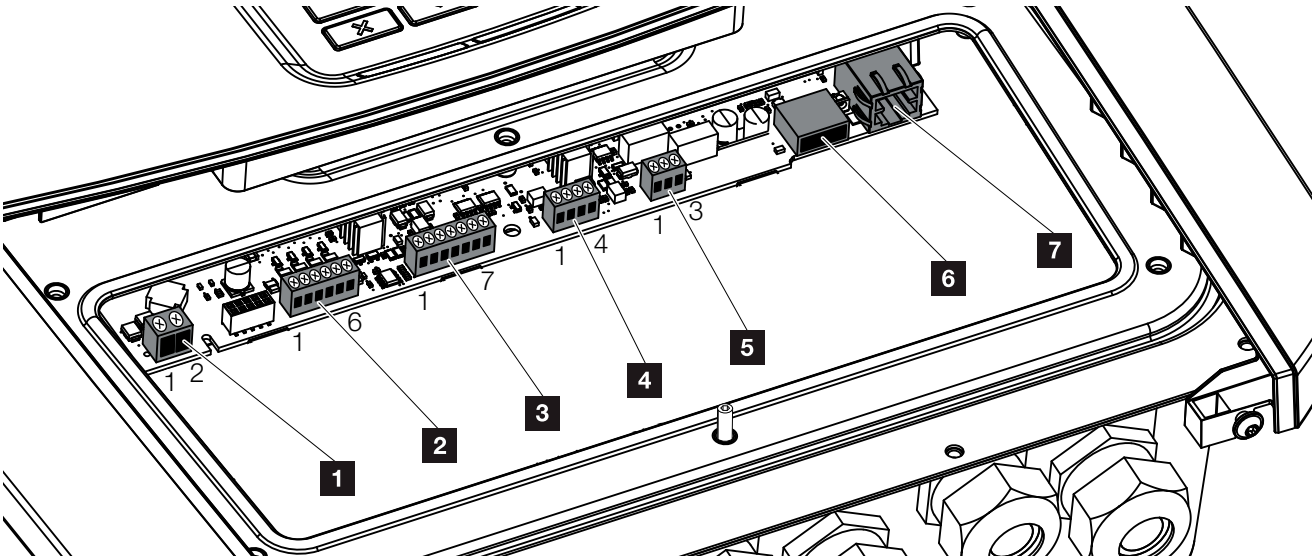

Fig. 24: Smart Communication Board - interfaces

Item	Designation	terminal	Pin	Explanation
1	Terminal for self-consumption	X461	1 - 2	Contact (NO switch) for self-consumption control
2	Terminal for digital connection for ripple control receiver or control box	X401	1	VDD (+12 to 14 V supply voltage)
			2	Input 1
			3	Input 2
			4	Input 3
			5	Input 4
			6	GND (0 V ground)
3	Not used	X601	1-7	-
4	Not used	X602	1 - 4	-
5	Terminal for energy meter (Modbus RTU master)	X452	1	Interface A (data +) RS485/Modbus RTU master
			2	Interface B (data -) RS485/Modbus RTU master
			3	GND
6	USB 2.0 interface	X171	1	USB 2.0 max. 500 mA (currently only for service)
7	Ethernet connection (RJ45)	X206	1	RJ45 max. 100 Mbit (LAN connection for linking to a router, for example)

© 2020 KOSTAL Solar Electric GmbH

3.6 Connecting energy meter

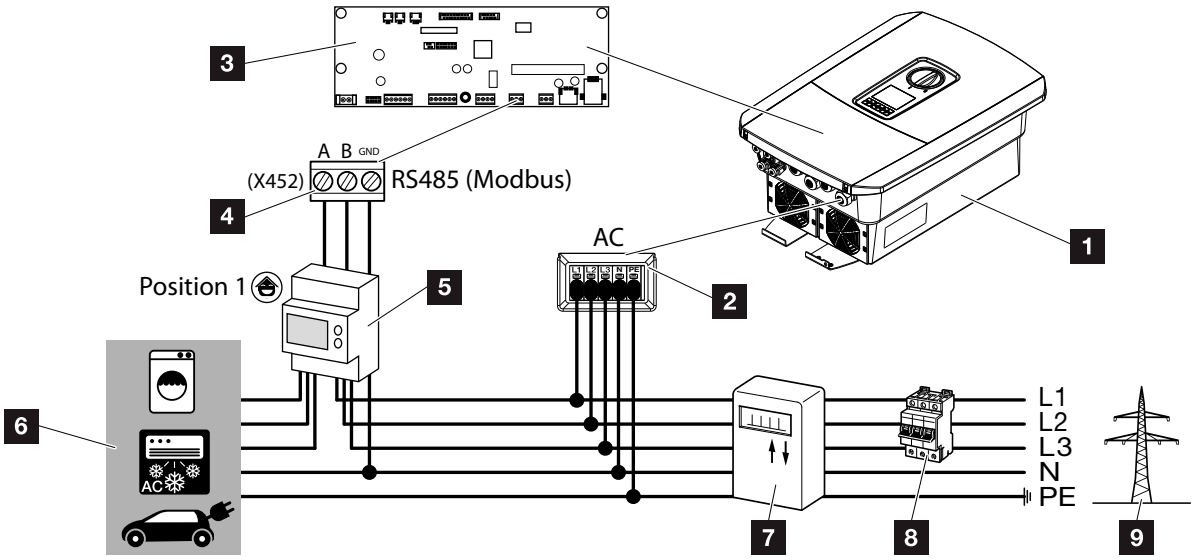

Fig. 25: Wiring diagram for energy meter - house connection (position 1)

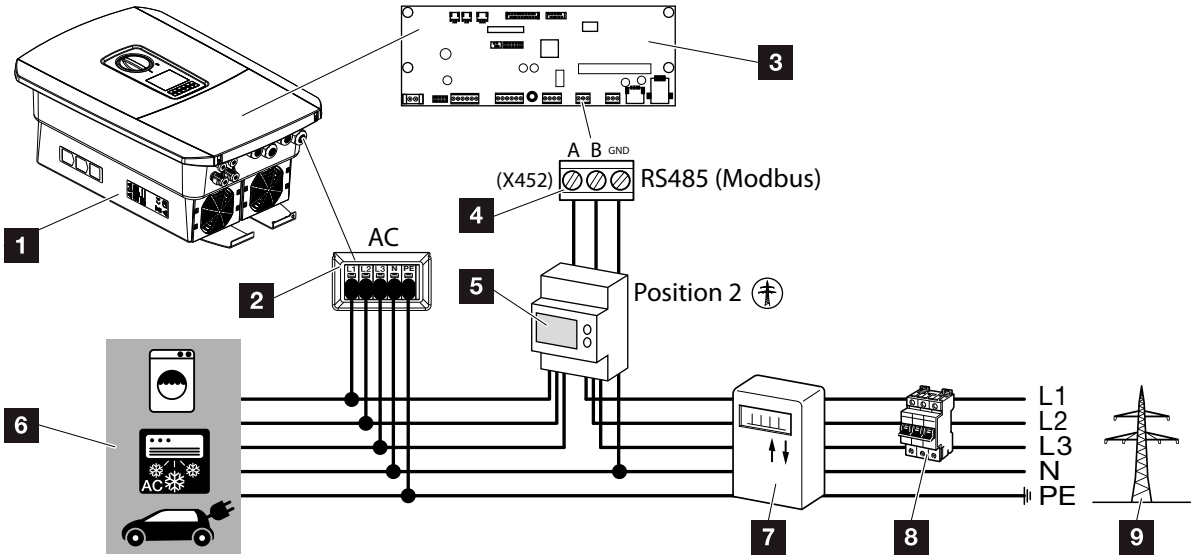

Fig. 26: Wiring diagram for energy meter - grid connection (position 2)

1. Inverter
2. Inverter – AC terminal
3. Smart Communication Board
4. Terminal for energy meter
5. Digital energy meter (Modbus RTU)
6. Consumer device
7. Purchase and feed meter or smart meter
8. Line fuse for house
9. Public grid

© 2020 KOSTAL Solar Electric GmbH

The energy meter is installed on a top-hat rail in the meter box or the main distributor.

The energy meter can be fitted in 2 positions in the home network (position 1 = home consumption, position 2 = grid connection point). Both installation positions are possible. Preference should be given to position 1 as it offers better measurement accuracy. The installation position is queried and set in the installation wizard or can be set in the Webserver.

The diagrams only provide an example because the connections may differ depending on the energy meter used.

IMPORTANT INFORMATION

Only energy meters which have been approved for the inverter by KOSTAL Solar Electric GmbH may be used.

You will find an up-to-date list of the approved energy meters on our homepage in the download area for the product.

The following energy meters are currently approved:

- KOSTAL Smart Energy Meter
- TQ EM 300 LR
  These meters can be used by the energy supply company to monitor, to control the battery and to control feed-in (e.g. 70%).
- B+G SDM630-Modbus
  This meter can only be used to monitor home consumption.

© 2020 KOSTAL Solar Electric GmbH

1. De-energise the home network.
2. Fit the energy meter on the top-hat rail in the control cabinet or power distributor.
3. Correctly route the communication cable from the inverter to the control cabinet and connect to energy meter following wiring diagram provided by manufacturer.
4. Connect communication cable in inverter to terminal for energy meter (0,2Nm).

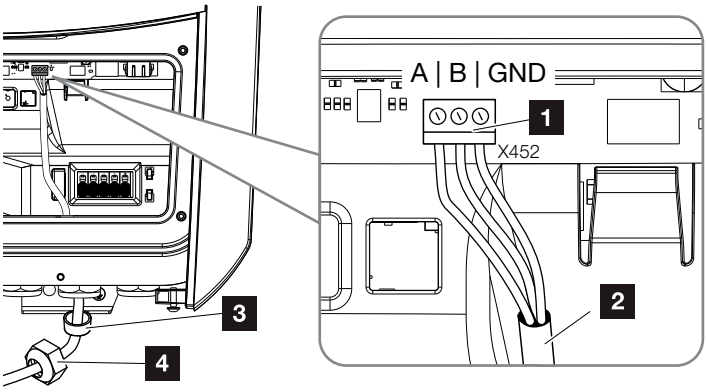

Fig. 27: Connection for digital energy meter (Modbus RTU)

1 Terminal for energy meter (Modbus RTU)
2 Communication cable to energy meter
3 Sealing ring
4 Union nut

✓ The energy meter is connected.

The type of energy meter used is selected when the inverter is first installed or can be set using the inverter menu or Webserver.

DANGER

RISK OF DEATH DUE TO ELECTRICAL SHOCK AND DISCHARGE!

De-energise all devices and secure against being switched on again.

INFO

The communication cable is subject to the following requirements:

- Wire cross-section of
  0.34 - 1.5 mm² (rigid)
  0.34 - 1.0 mm² (flexible)
- Max. length 30 m
- Length of stripped insulation
  4.5-5.5 mm

© 2020 KOSTAL Solar Electric GmbH

3.7 Connecting the ripple control receiver

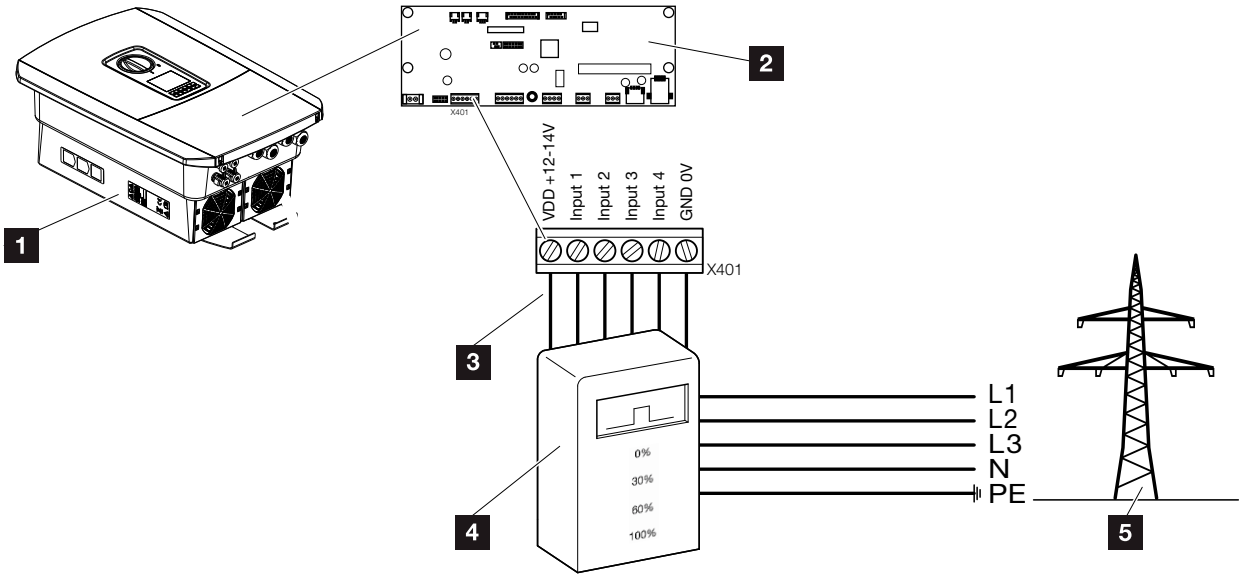

Fig. 28: Ripple control receiver

1. Inverter
2. Smart Communication Board (SCB)
3. Control line for ripple control receiver
4. Ripple control receiver
5. Energy supply company

Several energy supply companies offer the owners of PV systems the possibility of regulating their system with variable active power control and thus increasing the feed-in into the public grid to up to 100%.

Ask your energy supply company or installer what application rule applies to you or whether there is an alternative (e.g. smart meter) better suited to you.

If a ripple control receiver is already connected to another KOSTAL solar inverter in your home network, you can use the control signals of this ripple control receiver. In order to do this, receipt of broadcast control signals must be activated in the Webserver by going to Service menu > Energy management. **“Webserver menu – Service menu” on page 121**

INFO

In some applications, the digital energy meter may be seen as an attractively priced alternative to the ripple control receiver. Here the feed-in may well be limited by the energy supply company, but the inverter controls the flow of energy (self-consumption in home network and feed-in to the public grid) such that no or as little energy as possible is lost.

Dynamic active power control can be activated in the inverter to this end. Ch. 8

© 2020 KOSTAL Solar Electric GmbH

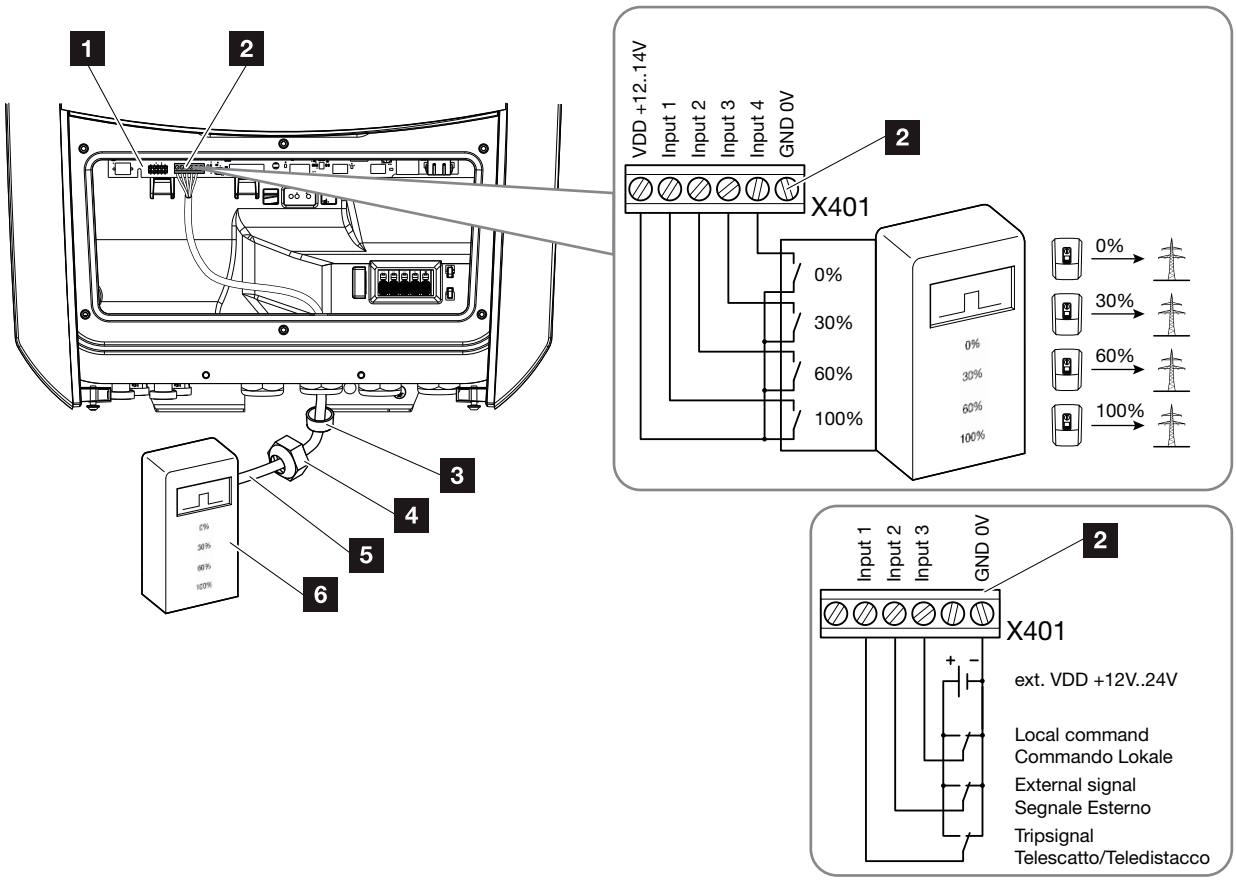

Fig. 29: Connection of ripple control receiver

1. Smart Communication Board
2. Terminal for ripple control receiver
3. Sealing ring
4. Union nut
5. Control line
6. Ripple control receiver

IMPORTANT INFORMATION

For Italy (standard CEI0-21), no voltage may be applied to terminal X401.1 (VDD).

© 2020 KOSTAL Solar Electric GmbH

DANGER

RISK OF DEATH DUE TO ELECTRICAL SHOCK AND DISCHARGE!

De-energise device and secure against being switched on again.
Ch. 4.3

1. De-energise the home network. **Ch. 4.3**
2. Fit ripple control receiver in control cabinet or power distributor.
3. Correctly route the communication cable from the inverter to the control cabinet and connect to ripple control receiver following wiring diagram provided by manufacturer.
4. Connect communication cable in inverter to terminal for ripple control receiver **Fig. 29, It. 2**
5. Once the inverter has undergone initial commissioning, the ripple control receiver still needs configuring in the Webserver. Forwarding of the ripple control receiver's signals (distribution of broadcast control signals) to other inverters in the same home network can also be activated.

✓ The ripple control receiver is connected.

More information about the configuration **Ch. 8**

INFO

The communication cable is subject to the following requirements:

- Wire cross-section of
  0.34 - 1.5 mm² (rigid)
  0.34 - 1.0 mm² (flexible)
- Max. length 30 m
- Length of stripped insulation
  4.5-5.5 mm

© 2020 KOSTAL Solar Electric GmbH

3.8 Connection for self-consumers

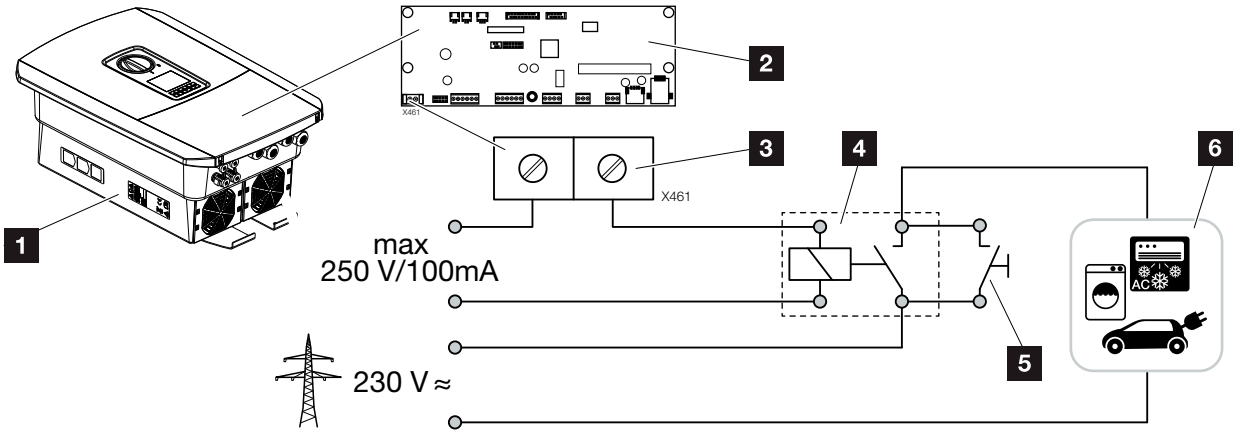

Fig. 30: Connection for self-consumers

1 Inverter
2 Smart Communication Board
3 Terminal for self-consumption
4 Load relay
5 Jumper switch
6 Consumer device

The inverter allows consumers to be connected to it via an external load relay. The consumers can then be switched on when there is sufficient PV power and thereby access the PV energy generated at that point in time.

More information about the connection and configuration **Ch. 9**

✓ Self-consumers connected.

INFO

The control line is subject to the following requirements:

- Wire cross-section of
  0.14 - 2.5 mm² (rigid)
  0.14 - 1.5 mm² (flexible)
- Max. length 30 m
- Length of stripped insulation
  5.5-6.5 mm

© 2020 KOSTAL Solar Electric GmbH

3.9 Communication connection

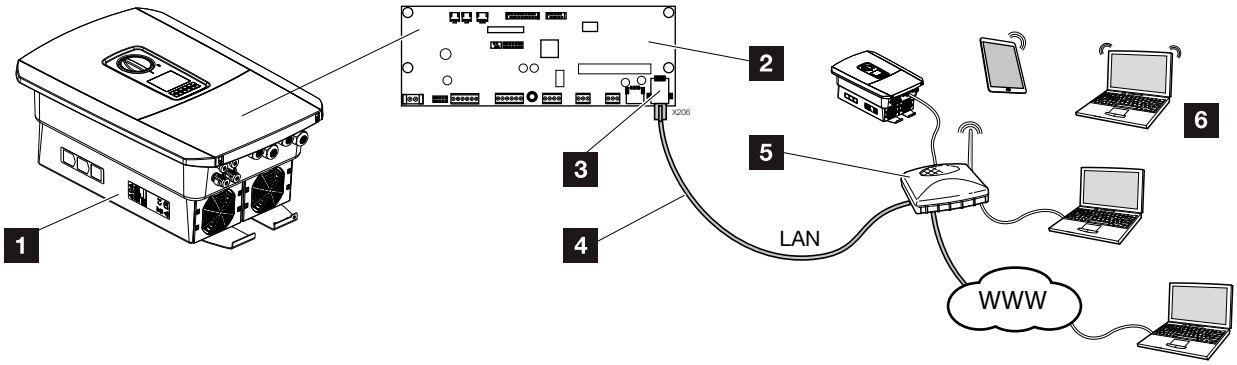

Fig. 31: Communication connection

1. Inverter
2. Smart Communication Board
3. RJ45 connection socket (Ethernet/LAN)
4. LAN cable
5. Router
6. Computer / router / tablet / KOSTAL solar inverter (for configuration or data retrieval)

The Smart Communication Board is the inverter's communication hub. To this end, computers, routers, switches and/or hubs can be connected to the RJ45 connection.

If the Ethernet cable is connected to a router, the inverter is integrated into your own network and can be contacted by all computers or KOSTAL solar inverters incorporated into the same network.

© 2020 KOSTAL Solar Electric GmbH

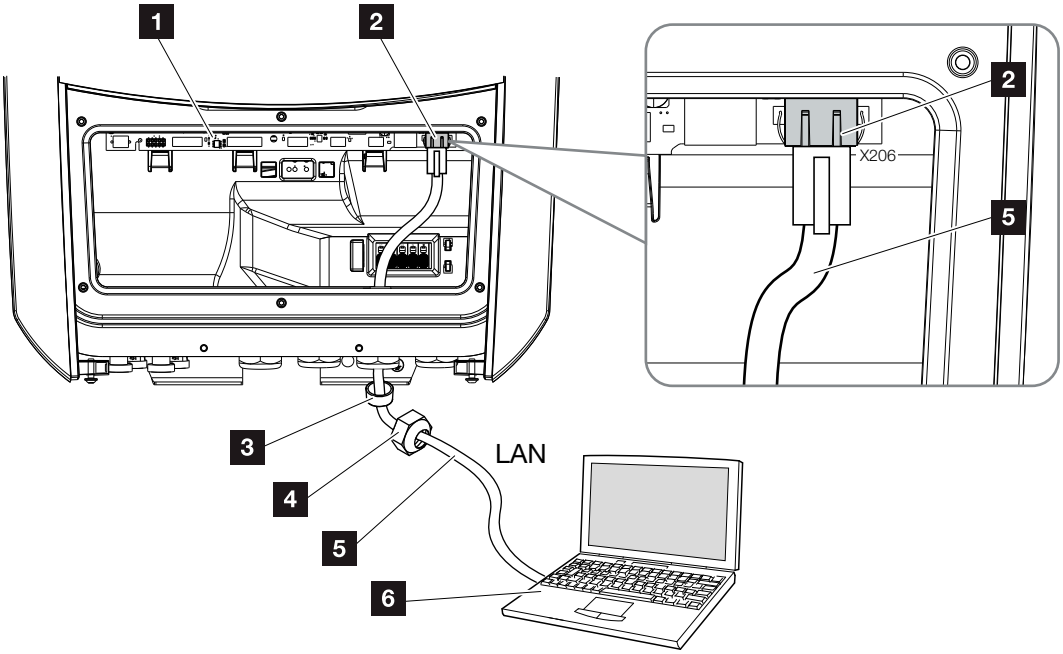

Fig. 32: Connecting inverter and computer with an Ethernet cable

1. Smart Communication Board
2. LAN connection (RJ45 Ethernet)
3. Sealing ring
4. Union nut
5. Ethernet cable (Cat 6)
6. Computer (for configuration or data retrieval)

1. De-energise the inverter's terminal compartment.
   Ch. 4.3
2. Insert Ethernet cable into the inverter and seal with sealing ring and union nut. Tighten union nut to the prescribed torque. Torques: 8 Nm (M25).
3. Connect Ethernet cable to LAN interface of Smart Communication Board.
   Fig. 32, It. 2
4. Connect the Ethernet cable to the computer or router.

✓ The inverter is connected with your own network.

DANGER

RISK OF DEATH DUE TO ELECTRICAL SHOCK AND DISCHARGE!

De-energise device and secure against being switched on again.
Ch. 4.3

INFO

For connection with a computer or computer network (Ethernet 10BaseT, 10/100 Mbit/s), an Ethernet cable of category 6 (Cat 6, FTP) with a max. length of 100 m is to be used.

© 2020 KOSTAL Solar Electric GmbH

3.10 Closing the inverter

1. Tighten all cable glands and check that they are properly sealed.
2. Check the fit of connected wires and strands in the inverter.
3. Remove any foreign objects (tools, wire cuttings, etc.) from the inverter.
4. Install the terminal compartment cover and screw it tight (2.0 Nm).
5. Fit cover on inverter and screw it tight (1.5 Nm).

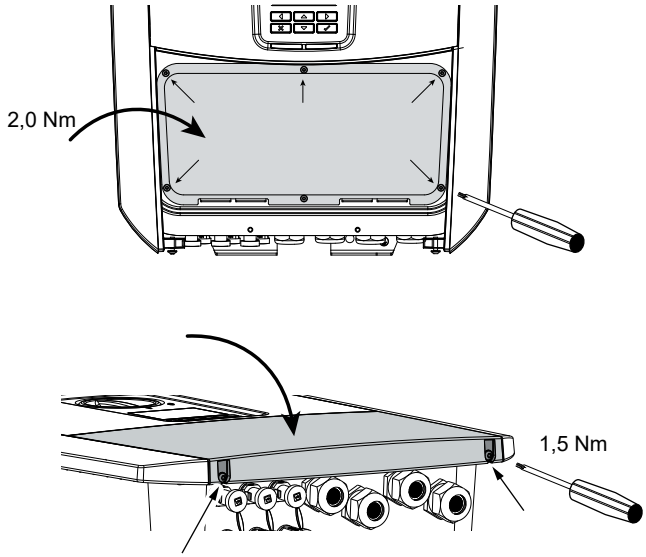

Fig. 33: Closing the inverter

© 2020 KOSTAL Solar Electric GmbH

3.11 Connection of solar module

Solar module connections

Note the following before connecting the DC plugs:

- In order to ensure an optimal layout of the solar modules and the highest possible yields, the system should be designed within the voltage range between U_{MPPmin} and U_{MPPmax}. KOSTAL Solar Plan should be used as a planning tool here.
- Check for the correct planning and wiring of the modules and then measure the DC idling voltage.
- Please ensure that the maximum permitted DC idling voltage is not exceeded.
  Log these measuring values and make them available in the event of complaints.
- If the output of the solar modules is higher than that specified in the technical data, it must be ensured that the working point is still within the MPP voltage range of the inverter.
- The solar module types used should be in the same PV string. This avoids loss of earnings.

Failure to do so will make any manufacturer's warranty, guarantee or liability null and void unless you can prove that the damage was not due to non-compliance.

WARNING

RISK OF FIRE DUE TO IMPROPER INSTALLATION!

Incorrectly fitted plugs and sockets may heat up and cause a fire. During installation, be sure to follow the manufacturer's requirements and manual. Properly mount plugs and sockets.

WARNING

SERIOUS BURNS DUE TO ARCS ON THE DC SIDE!

DC cables must never be connected to or disconnected from the device during operation, as dangerous arcs may form. De-energise DC side, then mount or remove plug connector!

WARNING

INJURIES CAN RESULT FROM DESTRUCTION OF THE DEVICE!

When the maximum values for the permitted input voltage at the DC inputs are exceeded, this can result in serious damage, which may destroy the device and cause serious injury to any person present. Even briefly exceeding the voltage can cause damage to thedevice.

© 2020 KOSTAL Solar Electric GmbH

Connecting solar module

Only solar modules of the following category may be connected: Class A as specified in IEC 61730.

The PV generators may only be connected to the inverter when this is voltage-free.

1. De-energise the inverter.
2. If there is more than one inverter in a PV system, ensure that no cross-connection occurs when the PV generators are connected.

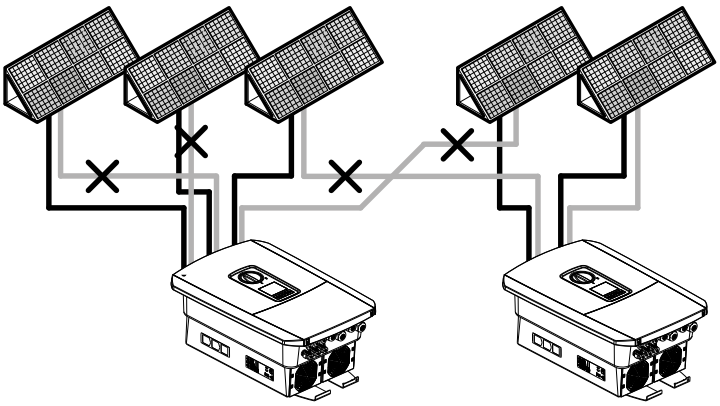

Fig. 34: Incorrect connection of PV generators

3. Check the strings for earth faults and short circuits and correct these where appropriate.
4. Correctly fit the plug on the positive cable and the socket on the negative cable. The inverter is equipped with plug connectors from PHOENIX CONTACT (type SUNCLIX). During installation, always observe the most recent specifications from the manufacturer (e.g. use of permissible tightening torques etc.).[1]

DANGER

RISK OF DEATH DUE TO ELECTRICAL SHOCK AND DISCHARGE!

The PV generators/cables may be live as soon as they are exposed to light.

DANGER

RISK OF DEATH DUE TO ELECTRICAL SHOCK AND DISCHARGE!

De-energise device and secure against being switched on again.
Ch. 4.3

DAMAGE POSSIBLE

If the PV generators are incorrectly connected (including cross-connection on the inverter itself), the inverter may be damaged. Check the connections before commissioning.

[1] You can find information about the Sunclix installation specification at: www.phoenixcontact.com

© 2020 KOSTAL Solar Electric GmbH

5. When mounting the sockets and plugs on the DC cables used by the solar modules, ensure their polarity is correct! The poles of the PV strings (PV field) must not be earthed. !

6. Plug the sockets and plugs of the DC cables onto the inverter. Keep the plug seals from the plug connectors. !

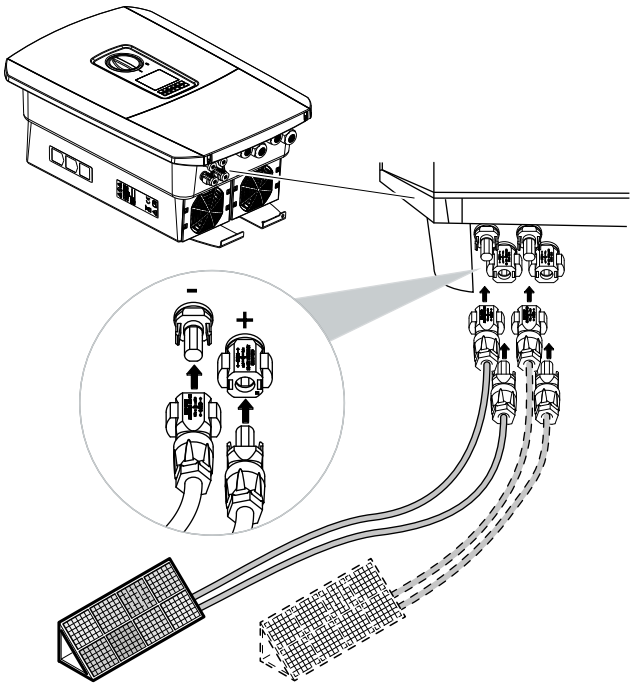

Fig. 35: Overview of DC connections

✓ The DC side is connected.

IMPORTANT INFORMATION

Use flexible and tinned cables with double insulation according to EN50618. We recommend a cross-section of 6mm². Observe the information provided by the connector manufacturer and the technical data of the inverter.

IMPORTANT INFORMATION

The solar module types used and the orientation should be in the same PV string.

© 2020 KOSTAL Solar Electric GmbH

3.12 Initial commissioning

Procedure for initial commissioning

1. Activate the supply voltage via the line circuit breaker.
2. Switch the DC switch of the inverter to ON. **Fig. 9**
   If external DC voltage separators are present, activate the DC strings consecutively.

➔ The installation wizard is shown on the display.

3. Press the right arrow key to start the installation.

➔ The language selection menu is shown.

4. Select language and confirm.
   To do so, use the arrow keys to select a language. Confirm the language with “ENTER”.
5. Press the right arrow key to go to the next installation item.

➔ The “Date and time” menu is displayed.

6. Select time zone and set date/time or run automatic detection. Confirm using “ENTER”.
7. Press the right arrow key to go to the next installation item.

➔ The “Energy management” menu is displayed.

8. Use the arrow keys to select the corresponding menu item and press the “ENTER” key.

IMPORTANT INFORMATION

At least the "Min. input voltage (U_{DCmin})" must be present for initial commissioning. The output must also be able to cover the inverter's self-consumption during initial commissioning.

INFO

The installation process can vary depending upon the software version of the inverter.

Information on using the menu:
Ch. 4.4

INFO

The entry of date/time ensures that the downloaded log data has the correct time assigned to it.

© 2020 KOSTAL Solar Electric GmbH

9. For “Max. feed-in capacity” enter the value specified to you by the energy supply company. Do this by pressing “ENTER” and using the arrow keys to enter the value. Confirm each digit with “ENTER”. At the end, use the arrow keys to go back to the input box and confirm the value with “ENTER”.
10. Use the arrow keys to select the energy meter field and press “ENTER”. Select the energy meter fitted from the list and confirm with “ENTER”. i
11. Use the arrow keys to select the sensor position field and press “ENTER”. Select the position of the energy meter fitted in the building services and confirm with “ENTER”. i
12. Press the right arrow key to go to the next installation item.

➔ The “Network settings” menu is displayed.

13. Press “ENTER” to activate the network protocol.
14. Enter the data relating to the network. This may be a fixed IP address for the inverter or obtaining the IP address automatically via DHCP. Confirm the input. Confirm the entries with “ENTER”.
15. Press the right arrow key to go to the next installation item.
16. Hit “ENTER” to activate the SunSpec protocol.
17. Enter the data relating to the SunSpec protocol. Confirm the entries with “ENTER”.

INFO

You will find a list of approved energy meters and their purpose in the download area for the product on our homepage at **www.kostal-solar-electric.com**

INFO

Position 1 (home consumption) or 2 (grid connection) states the installation position for the energy meter in the home network.

© 2020 KOSTAL Solar Electric GmbH

18. Press the right arrow key to go to the next installation item.

➔ The “Solar portal” menu appears on the display.

19. Select the corresponding menu item with the arrow keys.

20. Press “ENTER” and select the solar portal used. Confirm the input with “ENTER”.

21. To activate the transfer, highlight the item by pressing the “ENTER” key.

➔ The transfer is activated

22. Press the right arrow key to go to the next installation item.

➔ The “Extra option” menu appears on the display.

This item can be used to release options by entering an activation code in the inverter. A function with activation code can be purchased from our online shop.
Press “ENTER”, select the “Release option” and confirm the input. Enter the code you obtained previously in the KOSTAL Solar online shop. At the end, use the arrow keys to go back to the input box and confirm the value with “ENTER”.

23. Press the right arrow key to go to the next installation item.

➔ The “Country/guideline” menu appears on the display.

24. Select country or guideline used. Confirm the input with “ENTER”.

INFO

The extra options currently released are shown under “Released options”.

© 2020 KOSTAL Solar Electric GmbH

25. Press the right arrow key to go to the next installation item.

➔ “Accept settings” appears on the display.

26. Press “ENTER” to accept the input.

➔ The settings are assumed by the inverter.

➔ The inverter restarts after the installation.

✓ The inverter is in operation and can now be used. Initial commissioning is completed.

INFO

If an incorrect country setting has been selected, this can be re-assigned under the inverter's menu item for resetting national guideline.

INFO

If there is an update available for the inverter, install this first.

INFO

In France, the installer is personally responsible for obtaining any additional prescribed labels as required and attaching them to the inverter and feed cables.

© 2020 KOSTAL Solar Electric GmbH

3.13 Making settings in the Webserver

After the initial installation, more settings can be made using the inverter's menu or more conveniently via the Webserver.

To do this, use your PC or tablet to log into the Webserver as an installer. **Ch. 6.1**.

The following settings should be made after the initial commissioning:

- Inverter settings made by installer
- Prescribed settings for grid feed-in from energy supply company.
- Registration on the KOSTAL (PIKO) Solar Portal, if this has not yet been done.
- Make further settings, such as changing the password or updating the inverter software.

INFO

Parameters governed by the grid, limitations and guidelines can only be modified with a service code

To log in as an installer, you need the master key from the inverter's type plate and your service code, which can be requested from our service team. **Ch. 13.2**

© 2020 KOSTAL Solar Electric GmbH

4. Operation and operating the device

4.1 Switching on the inverter 68

4.2 Switching off the inverter 69

4.3 De-energising the inverter 70

4.4 Control panel 72

4.5 Operational status (display) 75

4.6 Operational status (LEDs) 78

4.7 The menu structure of the inverter 79

© 2020 KOSTAL Solar Electric GmbH

4.1 Switching on the inverter

1. Activate supply voltage via the line circuit breaker.
2. Switch the DC switch on the inverter to ON.
   Fig. 9
   If external DC voltage separators are present, activate the DC strings consecutively.

➔ The inverter starts up.

➔ During start-up, the LEDs in the control panel of the inverter light up briefly.

➔ The screensaver appears on the display and displays the device type. The screensaver is deactivated when a key is pressed twice.

✓ The inverter is in operation.

INFO

When no key has been pressed for several minutes, the screensaver with the image of the inverter appears automatically on the display.

© 2020 KOSTAL Solar Electric GmbH

4.2 Switching off the inverter

To interrupt the inverter's feed-in to the public grid, proceed as follows.

Additional steps are necessary for repair work on the inverter. **Ch. 4.3**

1. Turn the DC switch on the inverter to OFF. **Fig. 10**
2. If external DC voltage separators are present, switch off the DC strings consecutively.

✓ The inverter no longer feeds into the public grid. The inverter remains energised and monitoring is still performed.

© 2020 KOSTAL Solar Electric GmbH

4.3 De-energising the inverter

When working in the terminal compartment

When working in the inverter's terminal compartment, this area must be de-energised.

It is imperative that these steps are carried out:

1. Turn the DC switch on the inverter to OFF. **Fig. 10**
2. If used, switch off power supply for the self-consumption output. **Ch. 9.1**
3. Switch off the AC line circuit breaker.
4. Secure the entire voltage supply against being switched on again.

✓ The inverter's terminal compartment is now voltage-free (high voltage). The Smart Communication Board (SCB) is still supplied with voltage by the PV string and can display values in the inverter's display. The levels of voltage on the SCB are very low and not dangerous at all. Work in the inverter's terminal compartment or on the AC line can now be carried out.

DANGER

RISK OF DEATH DUE TO ELECTRICAL SHOCK AND DISCHARGE!

De-energise device and secure against being switched on again.

DANGER

RISK OF DEATH DUE TO ELECTRICAL SHOCK AND DISCHARGE!

Further steps should be taken when working on the DC feed cables (PV). These steps can be found on the following page.

© 2020 KOSTAL Solar Electric GmbH

When working on the DC feed cables

When working on the DC feed cables, the inverter must be **completely** de-energised.

It is absolutely essential that these steps are taken in addition to those stated previously:

1. Disconnect all DC connections on the inverter. To do this, unlock the engaging clips with a screwdriver and disconnect the plug. [1]

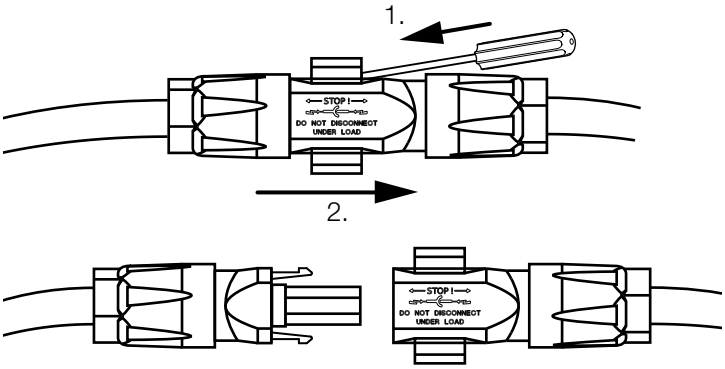

Fig. 36: Disconnecting SUNCLIX DC plug

2. Ensure that all connections are voltage-free.

✓ The inverter is now completely voltage-free. Work on the inverter or on the DC feed cables can now be carried out.

DANGER

RISK OF DEATH DUE TO ELECTRICAL SHOCK AND DISCHARGE!

De-energise all devices and secure against being switched on again.

[1] You can find information about the Sunclix installation specification at: www.phoenixcontact.com

© 2020 KOSTAL Solar Electric GmbH

4.4 Control panel

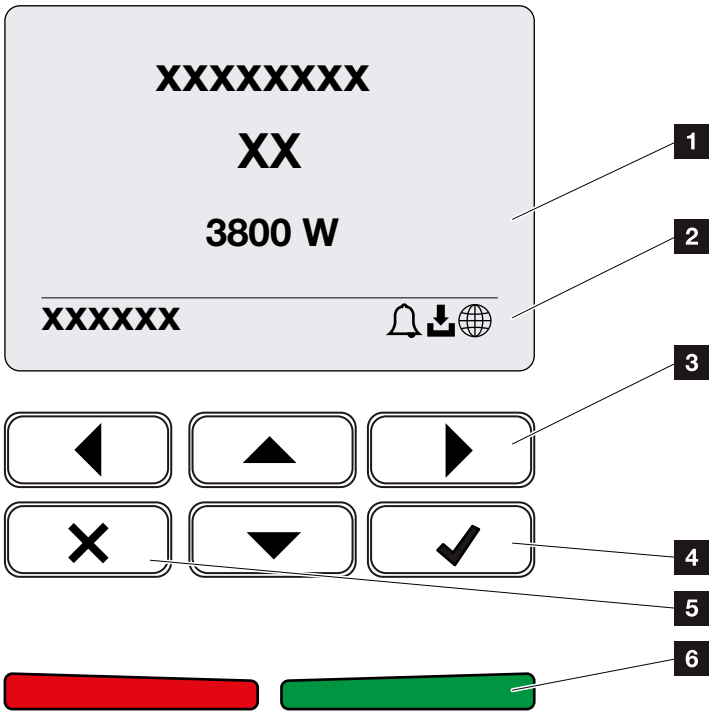

Fig. 37: Control panel

1. Display
2. Status display
3. Arrow key for navigating around the menus
4. "ENTER" key (for confirmation)
5. “DELETE” key (for deleting) or for exiting the menu
6. Status LED “Fault” (red), “Warning” (flashing red), “Feed-in” (green), “Feed in limited” (green flashing)

The inverter indicates the respective operational status through two LEDs and the display.

The operating values can be retrieved and settings adjusted on the display.

INFO

When no key has been pressed for several minutes, the screensaver with the image of the inverter appears automatically on the display.

© 2020 KOSTAL Solar Electric GmbH

Operation of the display

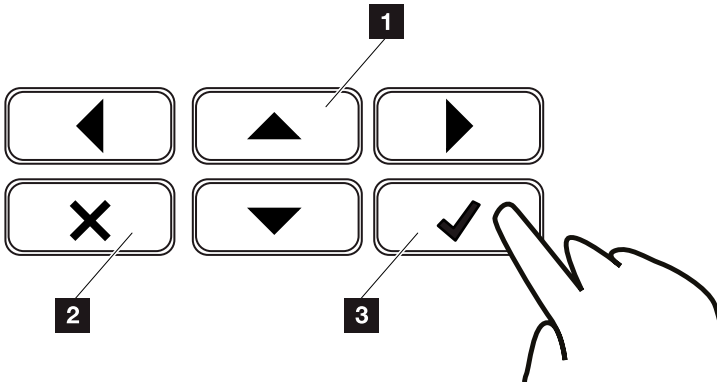

Fig. 38: Operation of the display

1. **UP / DOWN / LEFT / RIGHT:** Characters, buttons, functions and input fields are selected with the arrow keys.
2. **DELETE:** Pressing the “DELETE” key cancels the selection, input or value, aborts an input or jumps up a menu once the input has been confirmed.
3. **ENTER / confirm:** Pressing the "ENTER" key activates the selected menu element or confirms the input. Clicking in the “ENTER” input box saves the value.

© 2020 KOSTAL Solar Electric GmbH

Entry of text and numbers

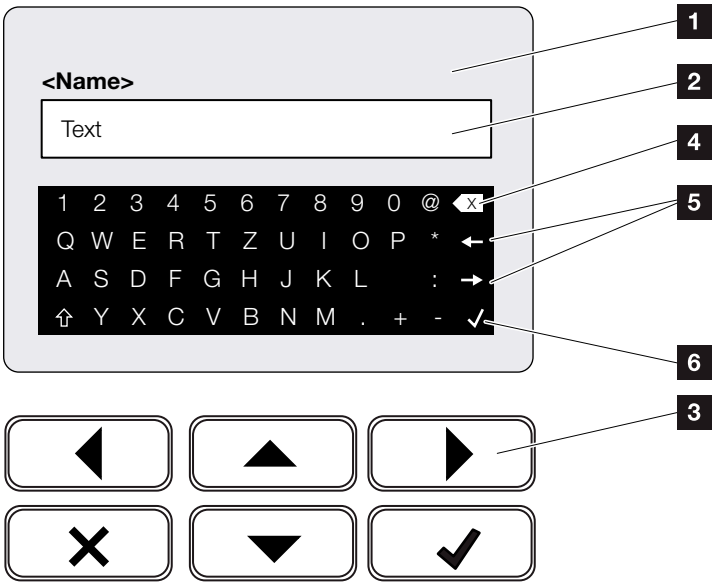

Fig. 39: Using keyboard to operate the display

1. Inverter display
2. Input box
3. Select character using the arrow keys, confirm with “ENTER” or exit the menu with “X”.
4. Individual characters to the left of the cursor can be deleted with the backspace key (<-).
5. The arrow keys can be used to move the cursor within the text.
6. The “Accept data” button is used to save the entry and close the menu.

The display can be used to enter texts and numbers (e.g. inverter name). When input is required, a keypad of letters and numbers appears under the input box in order to do this.

© 2020 KOSTAL Solar Electric GmbH

4.5 Operational status (display)

The operational statuses of the inverter are shown on the display of the inverter:

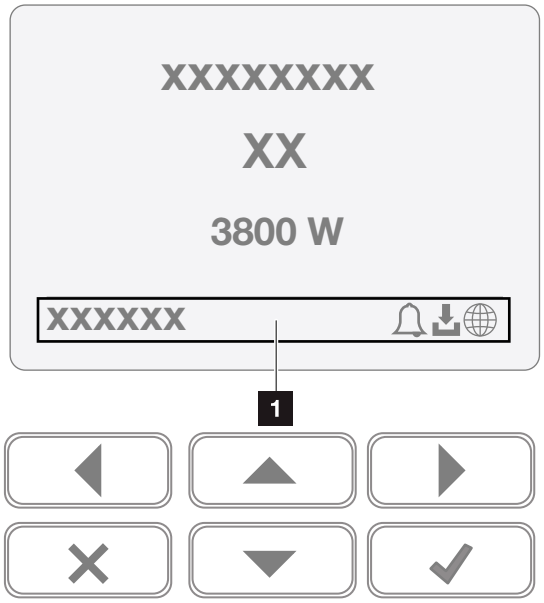

Fig. 40: "Operational status" display area

1 Display area, information and inverter status displayed

The following table explains the operational notifications that can appear on the display:

Display	Explanation
Off	Input voltage on the DC side (photovoltaic modules) is too low or inverter switched off.
Bell symbol	There is an active event. Remedial measures can be found in the "Event codes" chapter **Ch. 10.5** The event can be queried in the inverter menu by going to Service > Event list.

INFO

The user interface/menu entries in the inverter depend on the installed inverter firmware (FW) and the user interface software (UI) in the inverter and may deviate from the description provided here.

© 2020 KOSTAL Solar Electric GmbH

Display	Explanation
Download symbol	There is a software update available for the inverter. The update can be initiated in the inverter menu by going to Service > Updates or via the Webserver.
Globe symbol	Shows a successful connection to the solar portal.
IP address	The IP address of the inverter is displayed.
Insulation measurement	Device performs an internal check
Grid check	Device performs an internal check
Starting	Internal control measurements according to VDE 0126
Starting, including check of DC generators	Device performs an internal check
Feed-in (MPP)	Measurement successful, MPP control active (MPP = maximum power point)
Feed-in with ext. limitation	Feed-in is regulated on the basis of a fault (e.g. PV energy is limited **Ch. 8**, excess temperature, fault)
Shutdown by ext. signal	The feed-in is limited as a result of the energy supply company's external signal.
Event xxxx, yyyy	An event is present. Up to two active events can be displayed. Remedial measures can be found in the "Event codes" chapter **Ch. 10.5**

© 2020 KOSTAL Solar Electric GmbH

Display	Explanation
Waiting time ...	The device is not feeding into the public grid as a result of an event. Grid synchronization: The inverter synchronizes itself with the public grid and feeds in. Grid check: a grid check is performed. Grid error: there is an error in the public grid. As soon as this is rectified, the inverter feeds in again. Overheating: The inverter's temperature is too high. As soon as this has fallen, the inverter feeds in again.
DC voltage too low	Electronics are ready for operation, DC voltage is still too low for feed-in.
Impermissible DC voltage	DC voltage still too high.

Tab. 4: Operating messages and symbols

© 2020 KOSTAL Solar Electric GmbH

4.6 Operational status (LEDs)

The LEDs on the front indicate the current operational status.

LEDs on the inverter

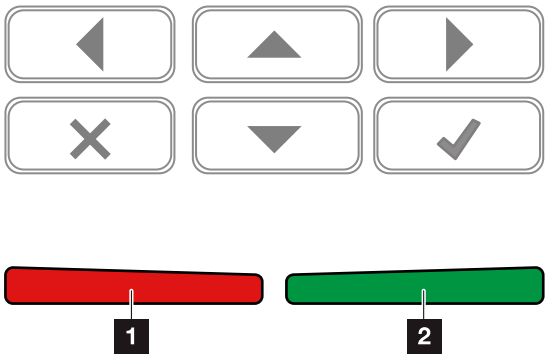

Fig. 41: LEDs on the display of the inverter

1 **Red LED off:**
There are no faults present.
Red LED flashing:
There is an event (warning) active.
Red LED lit up:
A fault has occurred. Remedial measures can be found in the "Event codes" chapter **Ch. 10.5**

2 **Green LED off:**
Inverter not feeding in.
Green LED flashing:
Inverter feeding in with limitation.
Green LED lit up:
The green LED signals the feed-in mode of the inverter.

© 2020 KOSTAL Solar Electric GmbH

4.7 The menu structure of the inverter

The screensaver

After starting up or if no key has been pressed for a long time, the screensaver is displayed on the inverter.

Pressing any key activates the background lighting. The screensaver is exited by pressing another key (any key).

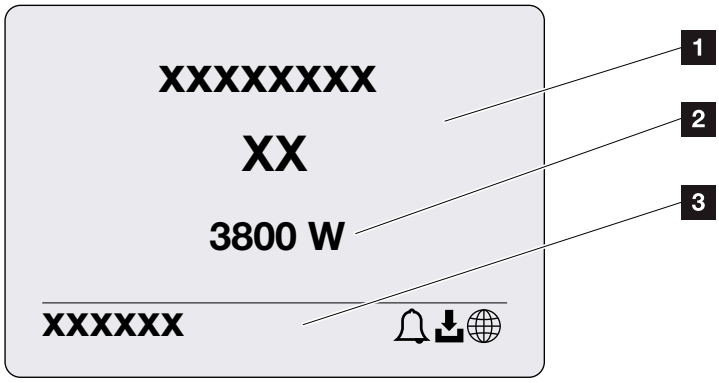

Fig. 42: Screensaver

1. Inverter type with power class
2. Current AC power, which is being fed into the public grid.
3. Status line, alternates every 5 seconds with:
   - IP address (if configured)
   - Inverter status
   - Event code (if available)
   - Solar portal connection active (if configured)

© 2020 KOSTAL Solar Electric GmbH

The power flow diagram

When the screensaver is being displayed, the power flow diagram can be displayed by pressing another key. The diagram is a very clear representation of the current power flow in the home network and includes the relevant power values. The arrows indicate the direction in which power is flowing at present.

Pressing the “OK” key exits the power flow diagram and switches to the inverter menu level.

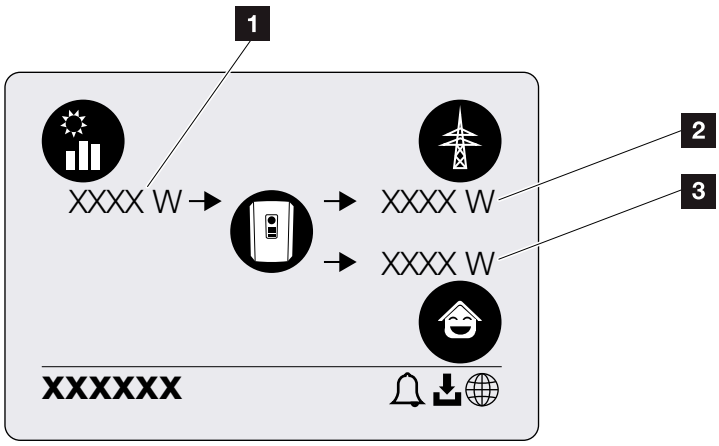

Fig. 43: Power flow diagram

1. Indication of power being generated by the PV modules.
2. Indication of power, which is being fed into or purchased from the public grid.
3. Indication of power being consumed in the house.

© 2020 KOSTAL Solar Electric GmbH

The inverter menus

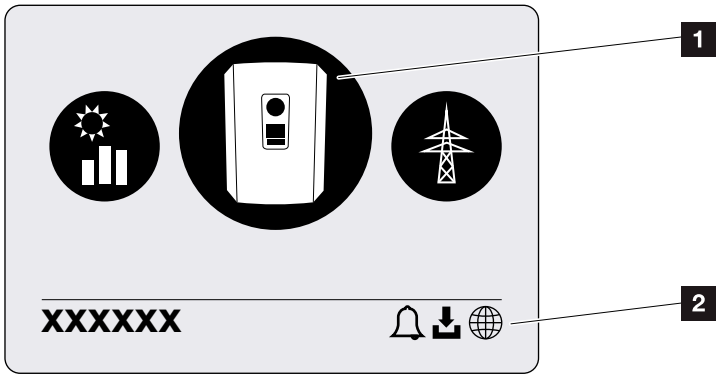

Fig. 44: Main menu structure

1 Active menu, selected using “ENTER”
2 Status line

The inverter provides the following menu items for querying statuses and configuring the inverter:

Symbol	Function
	Inverter settings
	Status query and information about the grid feed-in (AC side)
	Home consumption status query
	PV generators status query (DC side)

The menus are listed individually on the following pages.

INFO

The user interface/menu entries in the inverter depend on the installed inverter firmware (FW) and the user interface software (UI) in the inverter and may deviate from the description provided here.

© 2020 KOSTAL Solar Electric GmbH

Settings/information menu

- Basic settings
  - Language — Select language
  - Inverter name — Enter name
  - Date/time — Set date/time
- Communication
  - Network IPv4
    - Activate IPv4
      Automatically or manual setting of network parameters
    - DNS server setting
      Automatically or manual setting of DNS server (standard / alternative server)
  - Modbus SunSpec (TCP) — Activate SunSpec protocol and set parameters
- Solar portal
  - Portal
    - Select portal
    - Activate or deactivate data export
- Device information
  - Article number — Article number
  - Serial number — Serial number
  - Hardware — Hardware version
  - MC — Main controller version
  - IOC — Input output controller version
  - UI — Version of User Interface
  - National guideline — Set national guideline
  - Max. output power — Shows the set limitation

© 2020 KOSTAL Solar Electric GmbH

- Extra options
  - Release options — Entry of an activation code
  - Released options — Shows the released options with the possibility of deactivating them
- Service menu[1]
  - Service code input — Input of service code
  - Reset settings — Reset device to factory settings
  - Event list[2] — Shows the last 10 events with explanation
  - Energy management[3]
    - Input of max. feed-in capacity (default: max. inverter power)
    - Selection of energy meter and installation position, which was connected on the inverter
  - Reset national guideline[3] — Reset the country setting

[1] Following entry of the service code, additional menu items for configuring the inverter appear. The code can be requested for installers from the Service team.

[2] A maximum of 10 events are displayed. Information about events can be found in the "Event codes" chapter.

[3] Only possible if the service code is entered.

© 2020 KOSTAL Solar Electric GmbH

Public grid menu (AC side)

Current AC power	Shows the voltage (U), current (I) and power (P) per phase, which is being fed into the public grid.
Yield overview	Shows the power per day, month, year, total in Wh, kWh or MWh, which has been fed into the public grid.
Grid parameter	Shows the current grid frequency, the set reactive power (cos phi), the current power and, if configured, the set power curtailment, e.g. to 70%.

Home consumption menu

Current consumption	Shows the current consumption in the house and the source from which it is being covered.
Daily consumption	Shows the daily consumption in the house and the source from which it has been covered.
Monthly consumption	Shows the monthly consumption in the house and the source from which it has been covered.
Degree of self-sufficiency	Degree of self-sufficiency shows self-consumption in relation to home consumption. This states the percentage of energy consumed in the building that has been covered by the PV energy generated.
Self-consumption rate	Self-consumption rate shows the self-consumption in relation to the total power generated by the inverter. This states the percentage of generated energy used for self-consumption.

PV generator menu (DC side)

Current DC power	Shows the voltage (U), current (I) and power (P) per DC input[1]

© 2020 KOSTAL Solar Electric GmbH

Settings/information menu

Configuration of the inverter and additional components (e.g. energy meter) is performed under Settings/information.

Basic setting

Set the general parameters of the inverter.

Parameter	Explanation
Language	Selection of menu language
Inverter name	Enter the inverter name. The characters a–z, A–Z, 0–9 and "-" are permitted for the name change. Spaces or special characters are not possible. The browser connection to the Webserver can be established with the new name following the name change. Access with the serial number remains possible.
Date/time	Enter the time and date. Set the time zone (e.g. UTC (+1:00) for CET) Activate/deactivate or automatic determination of time. The NTP server can be configured via the Webserver.

© 2020 KOSTAL Solar Electric GmbH

Communication

Set the communication parameters for the inverter's Ethernet connection.

Parameter	Explanation
Network IPv4	Activate the network protocol and configure the network interface (Ethernet) for the inverter. The "Automatic" option is activated by default. If configuring manually, the corresponding parameter values should be entered.
	Set the DNS server: The "Automatic" option is activated by default. If configuring manually, the corresponding parameter values should be entered.
Modbus SunSpec (TCP)	Activate the protocol Enter the port and address parameter values.

INFO

The "Automatic" option is activated by default. This means that the inverter acquires its IP address from a DHCP server or automatically generates an IP address.

If the inverter is not allocated an automatic IP address through a DHCP server, the inverter can be configured using "Manually".

The data necessary for configuration, such as IP, router addresses etc., can be found on your router/gateway.

Solar portal

Input of solar portal configuration. If you want to use a solar portal, the log data and events can be sent to the solar portal.

Parameter	Explanation
Solar portal	Selection of solar portal.
Activate	Activated for starting to send to a solar portal.

© 2020 KOSTAL Solar Electric GmbH

Device information

Shows information about the versions installed on the inverter.

Parameter	Explanation
Article number	Article number of the inverter
Serial number	Inverter serial number
Hardware	Hardware version
MC	Main controller version
IOC	Input output controller version
UI	User interface version
National guideline	Shows the inverter's country setting
Max. output power	Shows the inverter's maximum output power

Extra options

This function can be used to release additional options for the inverter.

Parameter	Explanation
Release option	Entry of an activation code. This first has to be purchased from the KOSTAL Solar online shop.
Released options	Overview of options currently released in the inverter

INFO

The activation code can be purchased from the KOSTAL Solar online shop.

To access the shop, go to **shop.kostal-solar-electric.com**

© 2020 KOSTAL Solar Electric GmbH

Service menu

The installer or an experienced user can use the inverter's service menu to make settings on the inverter.

For the complete service menu to be displayed, the installer must request a code from the inverter manufacturer's service team.

The code is entered by going to the "Service code input" menu item.

Once the service code has been entered and confirmed, additional service menu entries appear.

Parameter	Explanation
Service code input	Input of service code and enabling of additional menu items.
Reset settings	Reset user settings This resets the following settings: Language, inverter name, date/time, network settings, protocol and solar portal.
Event list	Shows the last 10 events with date. Selecting an event and pressing the "OK" key displays a detailed view of the event.
Energy management **(only available once service code has been entered)**	**- Maximum grid feed-in** Set the max. feed-in capacity. Requirements relating to this are generally specified by the energy supply company (e.g. a limitation to 70%). The inverter's max. power serves as the default. **- Energy meter** Selection of the energy meter fitted in the building services.
Reset country setting **(only available once service code has been entered)**	Reset the country setting. After the reset, the commissioning wizard appears on the inverter following a restart

INFO

The service menu entries depend on the installed inverter firmware (FW) and the user interface software (UI) and may deviate from the description provided here.

Some menu items can also be run without a service password. These items should however only be run by experienced users because under certain circumstances the inverter may no longer run perfectly.

INFO

Should the inverter not restart automatically, switch it off using the DC switch and also the AC line circuit breaker. Wait 10 seconds and then restart in reverse order.

© 2020 KOSTAL Solar Electric GmbH

Public grid menu

Shows the current energy values of the AC side.

Current AC power

Shows the current performance data of the grid side (AC) and how the energy is distributed to the phases.

Parameter	Explanation
Phase 1	Shows the voltage, current and power, which is being fed into or taken from the public grid.
Phase 2	
Phase 3	

Yield overview

Indicates the energy which has been generated by the PV generators.

Parameter	Explanation
Day	Shows the yield values for the current day (from 00 to 24 hours).
Month	Shows all yield values for the current month (from day 1 to day 31).
Year	Shows all yield values for the current year (from 1 Jan. to 31 Dec.).
Total	Shows the total yield since commissioning.

Grid parameter

Shows the inverter's current grid parameters.

Parameter	Explanation
Current grid frequency [Hz]	Shows the grid frequency.
Current cos phi [W]	Indicates the current reactive power (cos phi).
Output power	Shows how much inverter power is being fed into the home network.
Limitation on [W]	Shows the current power curtailment setting.

© 2020 KOSTAL Solar Electric GmbH

Home consumption menu

Shows the home consumption and from which sources the home consumption is being covered (solar generator and public grid).

Current home consumption

Parameter	Explanation
Consumption	Current home consumption
From PV	Share of home consumption being covered by PV.
From grid	Share of home consumption being covered by the public grid.

Daily home consumption

Parameter	Explanation
Consumption	Home consumption of current day
From PV	Share of home consumption that has been covered by PV.
From grid	Share of home consumption that has been covered by the public grid.

Monthly home consumption

Parameter	Explanation
Consumption	Home consumption of current month
From PV	Share of home consumption that has been covered by PV.
From grid	Share of home consumption that has been covered by the public grid.

© 2020 KOSTAL Solar Electric GmbH

Degree of self-sufficiency

The degree of self-sufficiency indicates what percentage of the house's total power requirement is covered by self-generated PV energy. The higher the value, the less energy has had to be purchased from the energy supplier.

Parameter	Explanation
Day	Display for current day (from 00 to 24 hours)
Month	Display for current month (from day 1 to day 31)
Year	Display for current year (from 1 Jan. to 31 Dec.)
Total	Display for since initial commissioning

Self-consumption rate

The self-consumption rate shows the ratio between self-consumption and the total energy generated by the PV generators.

Parameter	Explanation
Day	Display for current day (from 00 to 24 hours)
Month	Display for current month (from day 1 to day 31)
Year	Display for current year (from 1 Jan. to 31 Dec.)
Total	Display for since initial commissioning

© 2020 KOSTAL Solar Electric GmbH

PV generator menu (DC side)

Shows the current energy values of the DC side.

- **Current DC power**

Shows the generated voltage, current and energy of the PV generators per DC input.

Parameter	Explanation
DC1	Shows the generated voltage, current and power of the PV generators for the DC1 input
DC2	Shows the generated voltage, current and power of the PV generators for the DC2 input

© 2020 KOSTAL Solar Electric GmbH

5. Connection types

5.1 Connecting the inverter and computer 94

5.2 Settings on the computer 95

5.3 Connecting the inverter and computer 96

5.4 Disconnecting the inverter from the computer 98

5.5 Connection via KOSTAL Solar App 99

© 2020 KOSTAL Solar Electric GmbH

5.1 Connecting the inverter and computer

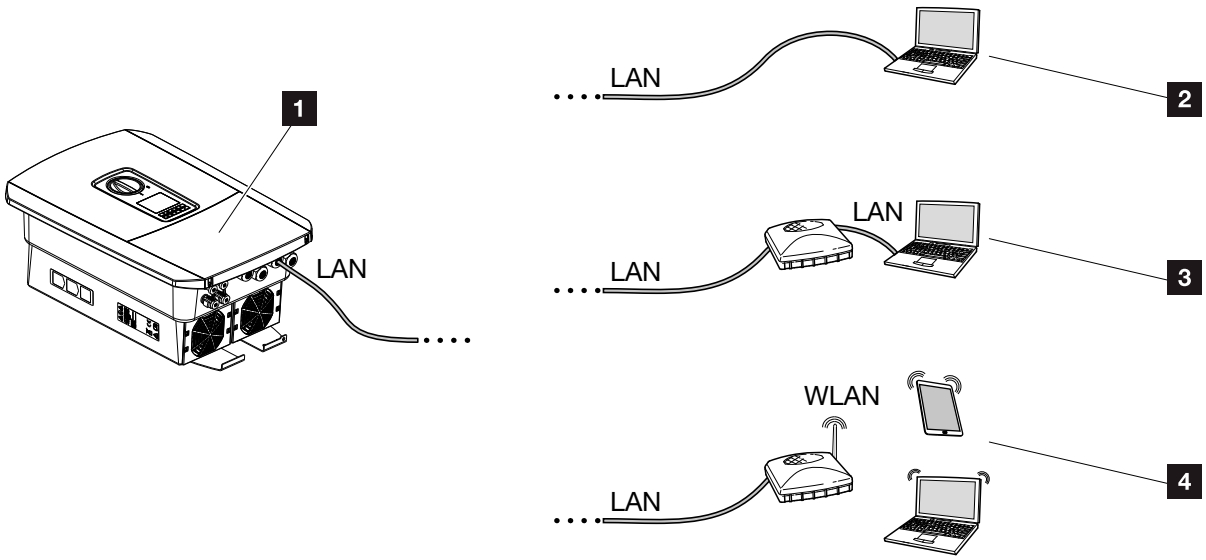

Fig. 45: Connection from computer to inverter

1. Inverter with LAN interface
2. Direct connection via LAN
   (only with manual IP configuration)
3. LAN connection via switch/hub/router
4. WLAN connection via WLAN router

The inverter can be contacted via a computer or tablet using various types of connection for the purposes of configuration or data retrieval. Several settings should be noted here. These are explained in more detail on the following pages.

For settings affecting the router or Internet, please contact the provider of the router, your provider or a network specialist.

INFO

If the inverter is to be accessed via the Internet, this shouldn't take place using unencrypted HTTP access (port 80).

Instead, preference should be given to encrypted access via HTTPS (port 443) and a VPN connection.

© 2020 KOSTAL Solar Electric GmbH

5.2 Settings on the computer

The items listed below relate to the Windows 10 operating system.

- In the Internet protocol (TCP/IP) of the computer, the options "Automatically acquire IP address" and "Automatically acquire DNS server address", must be activated.

  You can go to the settings for the Internet protocol (TCP/IP) via the control panel:
  Control Panel >> Network and Sharing Center >> Change Adapter Settings.
  Right-click on the LAN connection >> Properties >> Select "Internet protocol (TCP/IPv4)" > Properties.

- In the LAN settings of the computer, the option "Use proxy server for LAN" must be deactivated.

  You can reach the "LAN settings" via the control panel:
  Control Panel >> Internet options >> Tab: "Connections" >> LAN settings.

INFO

If the computer can already access the network in which the inverter is installed, these settings are not required.

© 2020 KOSTAL Solar Electric GmbH

5.3 Connecting the inverter and computer

This variant is mainly used when configuring the inverter by means of the Webserver on site

1. De-energise the inverter's terminal compartment.
2. Remove the inverter's cover.
3. Remove the terminal compartment's cover.

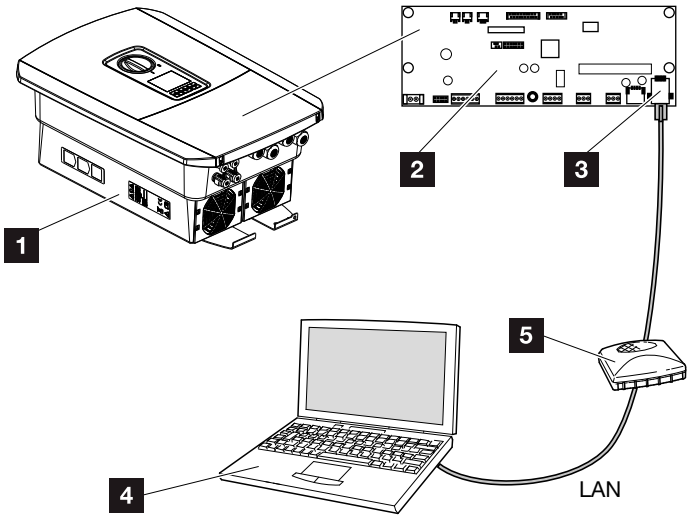

Fig. 46: Connecting inverter and computer with an Ethernet cable

1 Inverter with terminal compartment
2 Smart Communication Board with LAN interface
3 Ethernet cable (LAN)
4 Computer (for configuration or data retrieval)
5 Router

4. Insert Ethernet cable into the inverter and seal with sealing ring and union nut. Tighten union nut to the prescribed torque. Torques: 8 Nm (M25).
5. Connect Ethernet cable to LAN interface of Smart Communication Board.

IMPORTANT INFORMATION

Use a patch cable of category 6 (Cat 6e) with a maximum length of 100 m.

DANGER

RISK OF DEATH DUE TO ELECTRICAL SHOCK AND DISCHARGE!

De-energise device and secure against being switched on again.
Ch. 4.3

© 2020 KOSTAL Solar Electric GmbH

6. Connect Ethernet cable to a router or computer.
7. Close cover of terminal compartment and inverter (2.0 Nm).
8. Activate fuses and DC switch.

✓ The inverter is connected to the computer.

INFO

If the inverter is connected directly to the PC and if the inverter has not yet received its own IP address via a DHCP server, an IP address needs to be configured manually in the inverter. This can then be entered into the browser's address line on the PC to access the Webserver.

Connecting the Ethernet cable to a router integrates the inverter into your own network and the inverter can then be contacted by all computers incorporated in the same network.

© 2020 KOSTAL Solar Electric GmbH

5.4 Disconnecting the inverter from the computer

1. De-energise the inverter's terminal compartment.
   Ch. 4.3
2. Remove cover of inverter and terminal compartment.
3. Unplug the Ethernet cable from the inverter and computer.
4. Close the inverter cover.
5. Activate fuses and DC switch.

✓ The inverter is once again in operation.

DANGER

RISK OF DEATH DUE TO ELECTRICAL SHOCK AND DISCHARGE!

De-energise device and secure against being switched on again.
Ch. 4.3

TIP

Leave the Ethernet cable connected to the inverter. This makes it possible to easily carry out further queries or setting configurations on the inverter.

If connecting through a router, for example, there is no need to remove the connection.

© 2020 KOSTAL Solar Electric GmbH

5.5 Connection via KOSTAL Solar App

The free KOSTAL Solar App provides you with a way of professionally monitoring your photovoltaic system. You can use the KOSTAL Solar App to simply and easily access all functions on your smartphone or tablet at any time.

To set up and use the app, you will need access to the KOSTAL (PIKO) Solar Portal and to have an inverter set up there. You will need the access data used for the KOSTAL (PIKO) Solar Portal to log into the app.

You can use the KOSTAL Solar App to easily monitor your photovoltaic system and to display relevant system data both when you are out and about and at home. It allows you to access the consumption and generation data over various time periods, such as day, week, month and year, and to access the historical data of your photovoltaic system. So you are always up-to-date with the KOSTAL Solar App.

Download the free KOSTAL Solar App today and benefit from new and advanced functionalities.

© 2020 KOSTAL Solar Electric GmbH

6. Webserver

6.1 The Webserver 101

6.2 Calling up the Webserver 103

6.3 Menu structure of Webserver 105

6.4 Webserver menus 110

© 2020 KOSTAL Solar Electric GmbH

6.1 The Webserver

Webserver – start screen

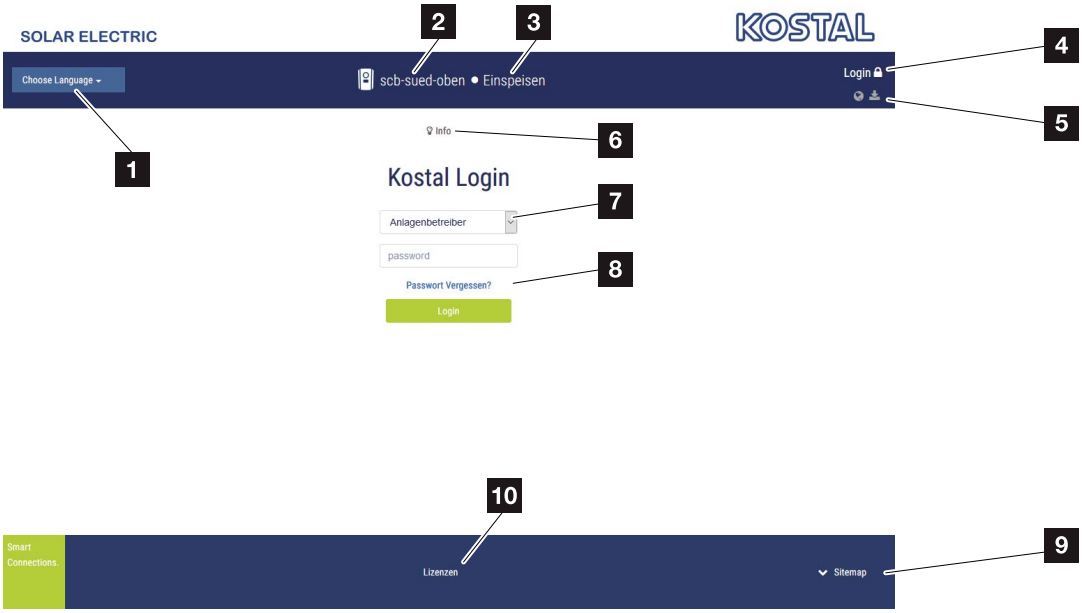

Fig. 47: Webserver – start screen

1. Language selection
2. Name of the inverter
3. Inverter status message
4. Webserver login/logout
5. Status messages
   Globe symbol: Status of solar portal connection
   Download symbol: Software update
6. Retrieval of device information
7. Login as plant owner or installer
8. The user can use the “Forgotten password” button to have a password for the Webserver re-assigned or to generally create a new web password for logging in for the first time.
9. Access to sitemap
10. Information about licences

The Webserver forms the graphic interface between the inverter and user. Even if you don't log in, here you can find information about your PV system, such as, device information and the current inverter status. Go to Login to log in as plant owner or installer.

IMPORTANT INFORMATION

To log in as a plant owner, you need a password, which has to be generated for the first login using “Forgotten password?”. For this, you also need the master key from the type plate.

To log in as an installer, you need the master key from the inverter’s type plate and your service code, which can be requested from our service team. Ch. 13.2

© 2020 KOSTAL Solar Electric GmbH

Webserver – menus

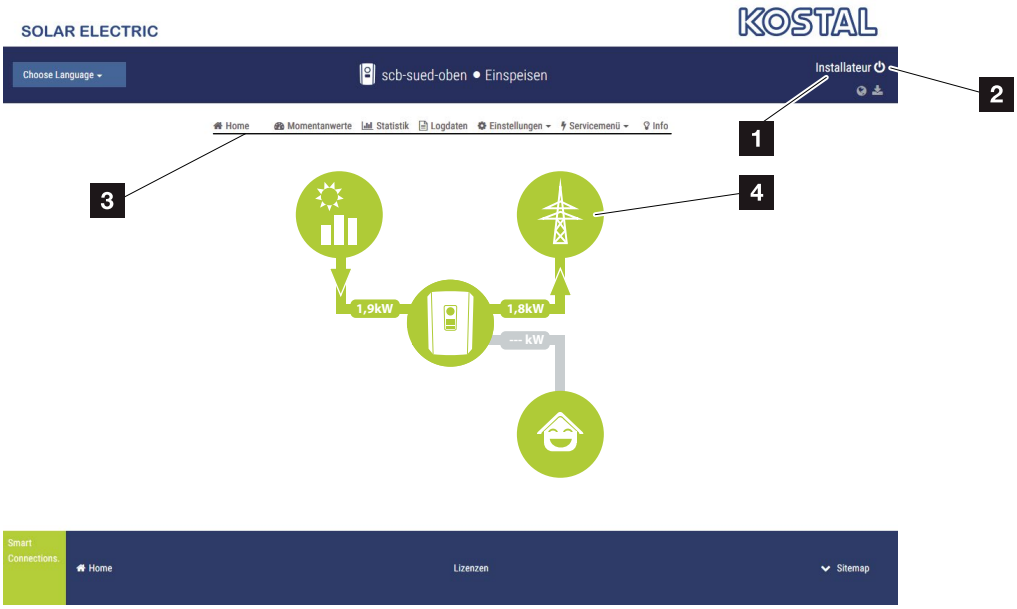

Fig. 48: Webserver – menus

1. User logged in
2. Logout from the Webserver
3. Inverter menus
4. Energy flow diagram

Once you have logged in as plant owner or installer, you can chose from various menu items.

The Webserver allows the user to view key information, current values, events and inverter versions.

The statistics provide an overview of yield and remuneration.

The Settings and Service menu allow the inverter to be configured quickly and easily. More information about the inverter can be found under Log data.

On the next few pages, you will find details of how to log into the Webserver and explanations of individual menu items.

INFO

Depending on user role (installer or plant owner), different menu items can be accessed.

Deviations in the appearance of the Webserver and the menu items described here may be possible due to different software versions (UI version).

© 2020 KOSTAL Solar Electric GmbH

6.2 Calling up the Webserver

The Webserver is accessed on the inverter from a computer using a web browser (e.g. Internet Explorer, Firefox or Google Chrome). Both devices must be on the same network.

Information about the connection and settings on the computer **Ch. 5**.

A user can log into the Webserver as a “Plant owner” or “Installer” using **Login**.

To log into the Webserver as an installer, you will need a personal service code and the master key for the inverter (can be found on the inverter’s type plate). After logging in, the installer can access advance setting options, which are not available to the normal plant owner. These settings require specialist knowledge.

Use **Logout** to log out of the Webserver.

TIP

Any device (e.g. a tablet PC) that has a browser can be used to access the Webserver.

INFO

You can request a service code from our service team. **Ch. 13.2**

© 2020 KOSTAL Solar Electric GmbH

Logging into the Webserver

Launch an Internet browser.

1. Enter the IP address
   of the inverter in the address line of the browser and confirm with "Enter".

➔ The Webserver is called up.

2. As a plant owner, log in with your password.

   If you want to log in as an installer, enter the following data:
   Master key: Master key from type plate Service code: Installer's service code Confirm the danger notice and exclusion of liability.

➔ The Webserver's menu opens.

TIP

The IP address is shown alternately in the inverter display or can be queried in the inverter.

IMPORTANT INFORMATION

To log in for the first time as a plant owner, you first have to have a password. This can be obtained using "Forgotten password". In the following menu, enter the master key and a new password. You will find the master key on the inverter's type plate.

The password must comprise at least 8 characters and include the following combination of characters: a-z, A-Z, 0-9

Should you forget your password, it can be re-assigned in the same way.

Making settings in the Webserver

After logging in, the settings required via the Webserver can be made on the inverter or the inverter's values can be queried.

© 2020 KOSTAL Solar Electric GmbH

6.3 Menu structure of Webserver

Deviations due to software versions (UI status) possible.

Home menu

Home	Shows power flow diagram

Current values menu

Current values	PV generator	Shows voltage, current, power for each DC input
	Inverter	Shows inverter status and active events
	Home consumption	Shows the home consumption and the sources from which the home consumption is being covered (solar generator and public grid).
	Mains grid	Shows voltage, current, power per phase and the grid parameters.

Statistics menu

Statistics	Daily yield	Shows yield for current day
	Monthly yield	Shows yield for current month
	Annual yield	Shows yield for current year
	Total yield	Shows total yield

Log data menu

Log data	Log data	Download log data from inverter

© 2020 KOSTAL Solar Electric GmbH

Settings menu

- Settings
  - Basic setting
    - Assign inverter name
    - Set date and time
    - Re-assign password
  - Network — Set up network settings (TCP/IP)
  - Modbus/SunSpec — Define and set up inverter's protocol (e.g. RS485, SunSpec or EEBus)
  - Solar portal — Selection of solar portal and input of portal code. Activate/deactivate the transfer of data to the portal and connection test.
  - Reset settings — Reset inverter to factory settings

© 2020 KOSTAL Solar Electric GmbH

Service menu – general

Service menu		
	Energy management[1]	Selection of the energy meter fitted, the installation position and the limitation of feed-in capacity (e.g. to 70%). Activation of storage in a connected battery of AC energy sources located in the same home network. Activate receipt of control signals from a ripple control receiver
	Generator settings	Set shadow management or use of external module controls
	External hardware settings	Set compatibility with type A RCD
	Digital inputs[1]	Set function of digital inputs (e.g. operating mode of ripple control receiver and activate the forwarding of control signals)
	Switched output	Set function of switched output (e.g. for self-consumption control)
	Extra option	Release extra option using activation code

[1] Can only be changed with a service code

© 2020 KOSTAL Solar Electric GmbH

Service menu – grid parameterization

Service menu		
	Parameterization report	Overview of parameters set in the inverter
	Reactive power settings[1]	Configuration of reactive power[1]
	Start-up ramp[1]	Configuration of start-up ramp in event of start or grid error[1]
	LVRT/HVRT[1]	LVRT/HVRT[1]
	P(f)[1]	Configuration of power reduction at overfrequency P(f)[1]
	P(U)[1]	Configuration of power reduction at overvoltage P(U)[1]
	Settling time[1]	Configuration of settling time Setting the settling time with external control of reactive power or active power by means of ripple control receiver or Modbus
	Grid and system protection [1]	Grid and system protection [1] Configuration of grid and system protection: Voltage L-N, frequency, start-up voltage, start-up frequency, start-up waiting time for start, start-up waiting time for grid error[1]
	Grid and system protection self-test	Self-test for grid and system protection Runs a self-test and outputs the result of this

[1] Can only be changed with a service code

© 2020 KOSTAL Solar Electric GmbH

Update menu

Update — Update — Perform inverter software update

Info menu

Info — Device information — Shows the device and grid information

© 2020 KOSTAL Solar Electric GmbH

6.4 Webserver menus

The following menus are available to the user in the Webserver. You will find a more detailed description of the individual points on the following pages:

- **Home**
  Shows power flow diagram
- **Current values**
  Using various statistics, the user can display the current values for daily, monthly, annual and total yield. Detailed information can be displayed by expanding the statistics.
- **Statistics**
  Shows information about the inverter's yield data for daily, monthly, annual or total time periods.
- **Log data**
  Here the inverter’s log data can be downloaded in total or for a limited time period.
- **Settings**
  These menu items can be used to configure the basic settings for the inverter (e.g. inverter name, network settings, specifications relating to remuneration, retrieval of log data).
- **Service menu**
  These menu items can be used by the installer to configure the inverter’s hardware (e.g. active power reduction or also special grid settings which have been specified by the energy provider).

© 2020 KOSTAL Solar Electric GmbH

- **Update**
  This menu item can be used to update the inverter by means of a software update.
- **Info**
  On the Info page the user can view events pending in the inverter or the inverter's installed versions (e.g. UI, MC, IOC, HW). This information can also be viewed without logging into the Webserver.

© 2020 KOSTAL Solar Electric GmbH

Webserver menu – Home

- **Home**
  Shows the power flow diagram. The directions of flow for the energy to and from the inverter are shown. The values indicate the power currently present.

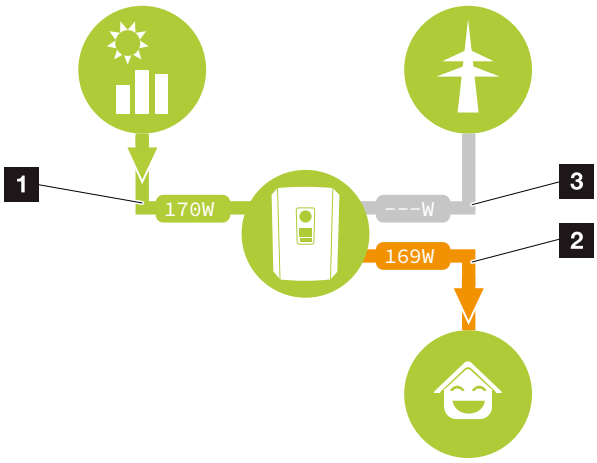

Fig. 49: Energy flow diagram

1 Green: Energy is being supplied
2 Orange: Energy is being purchased/consumed
3 Grey: No energy flow

© 2020 KOSTAL Solar Electric GmbH

Webserver menu – Current values

Menu items to display the current energy values of the AC and DC side.

- **PV generator**
  Shows the generated voltage, current and energy of the PV generators per DC input.

Parameter	Explanation
DC input x	Shows the generated voltage, current and power of the PV generators per DC input.

- **Inverter**
  Shows the current status of the inverter, current performance data of the grid side (AC) and how the energy is distributed to the phases.

Parameter	Explanation
Inverter status	Operational status of inverter. For more information, see **Ch. 4.5.**
Digital inputs	Signal status of terminal for digital input for ripple control receiver (input 1-4). The user can read off the display whether the feed-in is currently being limited by the energy supply company, for example. Settings, e.g. for user-defined active/reactive power reduction can be made by going to Service menu > Digital inputs. **Ch. 8.1.**
Output power	Shows how much inverter power is being fed into the home network.
Grid frequency	Shows the current grid frequency
Cos phi	Indicates the current power factor (cos phi)

© 2020 KOSTAL Solar Electric GmbH

Parameter	Explanation
Limitation on	Shows the current power curtailment setting. If an energy meter (e.g. a KOSTAL Smart Energy Meter) is fitted in the home network and power limitation is set, the active power is dynamically limited taking account of home consumption. This means that in addition to the set power curtailment, the home consumption is added up to the max. power limit of the inverter.
Phase x	Shows the power values per phase (x = 1, 2 or 3)

- **Home consumption**
  Shows the current home consumption and the sources from which it is being covered.

Parameter	Explanation
Current home consumption covered by	Shows the home consumption and the source from which it is currently being covered.

- **Grid**
  Shows the current performance data of the grid side (AC).

Parameter	Explanation
Grid	**Feed-in:** PV energy is fed into the public grid. **Purchase:** Energy is purchased from the public grid to cover home consumption.

© 2020 KOSTAL Solar Electric GmbH

Webserver menu – Statistics

Shows the yield for the day, month, year and total.

- **Yield statistics**
  Shows the yield/consumption values for the current day.

Parameter	Function
Day	Shows the yield/consumption values for the current day.
Month	Shows the yield/consumption values for the current month.
Year	Shows the yield/consumption values for the current year.
Total	Shows all yield/consumption values that have accumulated in the inverter.
Diagram	**Self-consumption:** The self-consumption shows the energy consumed by the user as a proportion of the total energy generated. **Degree of self-sufficiency:** The degree of self-sufficiency indicates what percentage of the house's total power requirement is covered by self-generated PV energy. The higher the value, the less energy has had to be purchased from the energy supplier.
CO_2 saving	Shows the purely arithmetical CO_2 saving that has been saved by the PV energy generated.
Home consumption	Shows the home consumption. **From PV:** Shows how much PV energy has been used for home consumption **From grid:** Shows how much energy has been fed into the public grid **From battery:** not used. No value is displayed.

© 2020 KOSTAL Solar Electric GmbH

Webserver menu – Log data

Call-up the log data from inverter.

Menu item	Function
Log data download	**Restricted time period:** Download a selected time period of log data from the inverter (max. 100 days).

The log data of the inverter can be downloaded as a file (logData.csv). The data in the file is in CSV format and can be viewed with any spreadsheet program (e.g. Excel).

For more information, see **Ch. 7.2**.

The data is saved on your hard drive. After saving, this data can be displayed and further processed.

INFO

The data is saved in the inverter for around 365 days. When the internal memory is full, the oldest data will be overwritten.

INFO

If the inverter is not connected to a solar portal, regular backup copies of the log data should be created.

© 2020 KOSTAL Solar Electric GmbH

Webserver menu – Settings

In Settings you can configure the inverter and the external components (e.g. ripple control receiver etc.).

- **Basic settings**
  Set the general parameters of the inverter.

  Inverter name
  Set the general parameters of the inverter.

Menu item	Function
Inverter name	Input of inverter name (max. 63 characters). The following characters are permitted: a–z, A–Z, 0–9 and "-". Spaces or special characters are not possible. The browser connection to the Webserver can be established with the new name following the name change or can continue using the IP address.

© 2020 KOSTAL Solar Electric GmbH

Time setting

Set time/date or select a time server.

Menu item	Function
Date and time	Input of time / date. The time can be taken from the PC.
Time zone	Set the time zone (e.g. UTC (+1:00) for CET)
Activate time server	Activate/deactivate a timer server (NTP server). After activation, the time from the time server is used. By using the NTP server, the switch between summer and winter time is also performed automatically.
NTP server	Input of IP address or name of NTP server (Network Time Protocol). Other, alternative NTP servers can be added via Plus. There are numerous free NTP servers in the Internet, which can be used here.

Change password

Change Webserver password.

Menu item	Function
Change password	Change Webserver password. The password must comprise at least 8 characters and include the following combination of characters: lower-case letters (a-z), upper-case letters (A-Z) and numbers (0-9).

© 2020 KOSTAL Solar Electric GmbH

- **Network**

  Set the communication parameters of the inverter.

Menu item	Function
Automatically acquire IP address	If the box is ticked, the IP address is generated automatically by a DHCP server. Most routers provide a DHCP server as standard.
IP address (only with manual configuration)	Enter the IP address of the inverter
Subnet mask (only with manual configuration)	Enter the subnet mask e.g. 255.255.255.0
Router/gateway (only with manual configuration)	Enter the IP address of the router
DNS server 1 (only with manual configuration)	Enter the IP address of the DNS server (Domain Name System)
DNS server 2 (only with manual configuration)	Enter the IP address of the backup DNS server (Domain Name System)

- **Modbus / SunSpec (TCP)**

  Activate the protocol, which can be used in the inverter to exchange data with external data loggers, linked to the inverter via the LAN interface.

Menu item	Function
Activate Modbus	Output of port (1502) and ID (71) parameters for Modbus / SunSpec. Activate the protocol on the LAN TCP/IP interface. Is used for the external data logger, for example. No further settings are needed here.

INFO

The "Obtain IP address automatically" option is activated by default. This means that the inverter obtains its IP address from a DHCP server.

INFO

If the inverter is not allocated an IP address automatically through a DHCP server, the inverter can be configured manually.

The data necessary for configuration, such as IP, subnet mask, router and DNS addresses, can be found on your router/gateway.

© 2020 KOSTAL Solar Electric GmbH

- **Solar portal**
  Input of solar portal configuration. If you want to use a solar portal, the log data and events can be sent to the solar portal.

Menu item	Function
Use portal	Activates the transfer to the solar portal.
Portal	Selection of solar portal.
Last transfer	Indicates when the inverter last transferred data to the solar portal (provided the function is active).
Last successful transfer	Indicates when the inverter last successfully transferred data to the solar portal (provided the function is active).

INFO

The solar portal can only be used for inverters, which are linked to the Internet.

- **Reset system owner settings**
  Reset inverter to factory settings.

Menu item	Function
Reset to factory settings	The values for the basic settings, network, Modbus/SunSpec and solar portal are reset to the factory settings

© 2020 KOSTAL Solar Electric GmbH

Webserver menu – Service menu

In the service menu, the installer will find more configuration options for configuring the inverter. In order to make these settings, you need precise knowledge of the requirements of the public grid, which are specified by the energy supply company (e.g. reduce active power, set parameters, which are specified by the energy supply company.)

- **Energy management**
  (can only be configured with service code)
  Selection of the connected energy meter on the inverter and the restriction for the feeding into the public grid.

Menu item	Function
Energy meter	Selection of connected energy meter.
Sensor position	Select the position of the energy meter fitted in the building services. **Ch. 3.6** Position 1 = grid connection Position 2 = home consumption
Limitation of the active power to [W]	Set the max. feed-in capacity. Requirements relating to this are generally specified by the energy supply company (e.g. a limitation to 70%). The inverter's max. power serves as the default. Use the calculator to easily calculate the reduction.

INFO

The setting in this menu requires special knowledge of the grid configuration.

INFO

You will find a list of approved energy meters and their purpose in the download area for the product on our homepage at
www.kostal-solar-electric.com

© 2020 KOSTAL Solar Electric GmbH

Menu item	Function
Activate receipt of broadcast control signals	If there is a ripple control receiver connected to another inverter's digital inputs, these signals can be allocated to all inverters in the local area network (LAN) for active and reactive power control by means of UDP broadcast. A local energy manager can also generate signals for active and reactive power control in the local area network. **Activated:** The inverter is controlled by means of a ripple control receiver connected to another inverter. **Deactivated (default):** The signals are not evaluated. The inverter is not controlled by means of a ripple control receiver connected to another inverter.

© 2020 KOSTAL Solar Electric GmbH

- **Plant configuration**

  Settings for MPP tracking optimisation.

Menu item	Function
Plant configuration	**None:** No optimisation is perform. **Shadow management:** If PV strings are in partial shading, the PV string affected no longer achieves its optimum performance. If shadow management is activated, the inverter adapts the MPP tracker of the selected PV string such that it can operate at maximum possible performance.

- **External hardware settings**

  Settings for hardware settings.

Menu item	Function
Residual current protection equipment	**Compatibility of type A RCD:** If this function has been activated, type A RCDs can be used as residual current protection equipment. In such cases, the inverter shuts down when the residual current becomes incompatible for a type A RCD. If the function is deactivated, a type B RCD must be used as residual current protection equipment if a RCD is stipulated.

© 2020 KOSTAL Solar Electric GmbH

- **Digital inputs**
  (can only be configured with service code)
  Selection of use of digital inputs on the SCB (terminal X401).

Menu item	Function
none	There is nothing connected to the digital inputs.
External trip input (for Italy)	Setting for external shutdown for Italy (Telescatto / Teledistacco). A voltage VDD is applied at input 1.
Parameter set change-over (for Italy)	Setting for local parameter set changeover for Italy (Commando Locale). A voltage VDD is applied at input 3. As soon as there is then also voltage at input 2, the close parameter set is activated.
External trip and parameter set change-over (for Italy)	Setting for external parameter set changeover for Italy (Segnale esterno). A voltage VDD is applied at input 2. As soon as there is also voltage at input 3, the close parameter set is activated.
Active power control	For the connection of a ripple control receiver with standard switching specifications. Detailed description in chapter Self-consumption. **Ch. 8** Activate the distribution of ripple control signals in the home network. **Activated:** If a ripple control receiver is connected to the inverter, the control signals of this ripple control receiver are distributed in the local LAN network by means of UDP. Other inverters can therefore also be controlled using the connected ripple control receiver. **Deactivated:** The control signals are not distributed in the local LAN network by means of UDP.

© 2020 KOSTAL Solar Electric GmbH

Menu item	Function
User-defined active/ reactive power control	For the connection of a ripple control receiver. Unlike the standard active power control, here you can specify up to 16 settings. This is usually specified by the energy supply company. Detailed description in chapter Self-consumption. **Ch. 8** Activate the distribution of ripple control signals in the home network. **Activated:** If a ripple control receiver is connected to the inverter, the control signals of this ripple control receiver are distributed in the local LAN network by means of UDP. Other inverters can therefore also be controlled using the connected ripple control receiver. **Deactivated:** The control signals are not distributed in the local LAN network by means of UDP.

- **Switched output**

  Set the function of the self-consumption terminal (terminal X461) on the Smart Communication Board. The 2-pin terminal can be assigned various functions.

Parameter	Function
Self-consumption control or Dynamic self-consumption control	The switched output functions as a potential-free NO switch. It closes when the set conditions are fulfilled. Detailed description in chapter Self-consumption. **Ch. 9**

© 2020 KOSTAL Solar Electric GmbH

- **Extra options**
  This function can be used to release additional options for the inverter.

Parameter	Explanation
Release new option	Entry of an activation code. This first has to be purchased from the KOSTAL Solar online shop.
Released options	Overview of options currently released in the inverter

INFO

The activation code can be purchased from the KOSTAL Solar online shop.

To access the shop, go to **shop.kostal-solar-electric.com**

© 2020 KOSTAL Solar Electric GmbH

Webserver menu – Service menu – Grid parameterization

The following menu items can be used to set the parameters in the inverter, which are specified by the grid operator.

Parameters may only be changed on the inverter by qualified electrical technicians who are familiar with the system and at the request of the grid operator.

Inappropriate settings can be hazardous and lead to injury or even death of the user or third parties. Material damage to the device and other equipment can also occur.

- **Show configuration report**
  Issues an overview of the parameters set in the inverter.
- **Configuration of reactive power (can only be configured with service code)**
  The following selection options are available:

Parameter	Function
No reactive power mode active	No reactive power is set.
Reactive power Q	The grid operator (energy supply company) specifies a fixed reactive power in Var.
Displacement factor cos ϕ	The grid operator specifies a fixed displacement factor cos ϕ
Reactive power / voltage characteristic curve Q(U)	The grid operator specifies a characteristic curve Q(U).
Displacement factor / power curve cos ϕ	The grid operator specifies a characteristic curve for cos ϕ (P). .

IMPORTANT INFORMATION

The settings may only be adjusted by trained and qualified electrical technicians.

The electrician is responsible for ensuring that the applicable standards and regulations are observed and implemented. Work that could affect the electrical power system of the respective energy supply company at the site of the solar energy feed-in may only be carried out by qualified electricians expressly authorised (licensed) by the energy supply company.

This includes changes to the factory preset parameters of the inverter.

© 2020 KOSTAL Solar Electric GmbH

- **Configuration of start-up ramp (can only be configured with service code)**

Parameter	Function
Ramp time [s]	States the time in seconds after a restart or grid error for which the inverter waits before starting up. The ramp time is also used for P(f) and P(U).

- **LVRT/HVRT (can only be configured with service code)**

Parameter	Function
LVRT	Configuration of Low-Voltage-Ride-Through LVRT is the electrical ability to provide dynamic grid support through electrical generation units.
HVRT	Configuration of High-Voltage-Ride-Through HVRT is the electrical ability to provide dynamic grid support through electrical generation units.

- **Configuration of power reduction at overfrequency P(f) (can only be configured with service code)**

Parameter	Function
Reduction curve	The characteristics curve is defined by a change in frequency which is expressed as a percentage of rated frequency and causes a 100% change in rated output.
Conditions for returning to normal mode	Input of frequency range and waiting time in seconds

© 2020 KOSTAL Solar Electric GmbH

- **Configuration of power reduction at overvoltage P(U)**
  (can only be configured with service code)

Parameter	Function
Reduction curve	The characteristic curve is defined by a start and end point for the voltage. At the start point, the power is reduced by 0% and at the end point by 100%.
Settling time	Selection of the settling time
Conditions for returning to normal mode	The reduction in power ends once the voltage has fallen below the stated value and the specified waiting time has elapsed.

- **Settling time**
  (can only be configured with service code)
  Set the settling time with external control of reactive power or active power by means of ripple control receiver or Modbus.

Parameter	Function
Settling time [s]	With external control of reactive power (Q, cos ϕ), the settling time can be set in seconds. Select the specifications of the grid operator (energy supply company) here.
Mode	With external control of active power, the following parameters can be set. Standard: no further details needed (default) PT1: Selection of the settling time in seconds. Power limit gradient: Input of maximum power limit gradient. Enter the specifications of the grid operator (energy supply company) here.

© 2020 KOSTAL Solar Electric GmbH

- **Grid and system protection (can only be configured with service code)**
  The settings for the grid and system protection may only be changed in exceptional cases for good reason and in consultation with the grid operator (energy supply company).

Parameter	Function
Shutdown limits for voltage	The settings for the grid and system protection may only be changed in exceptional cases for good reason and in consultation with the grid operator (energy supply company). Enter the specified values in the corresponding fields.
Shutdown limits for frequency	
Use switchable shut-down limits	
Start-up conditions	

- **Self-test for grid and system protection**
  Runs a self-test with the set values and outputs the result of this.

© 2020 KOSTAL Solar Electric GmbH

Webserver menu - update

This function can be used to load software updates into the inverter. To do this, drag the update file (*.swu) into the box or use the button to select a file on your computer and launch the installation.

You will find the latest software for your product in the Download area on our homepage by going to Product category > Model > Country > Update.

Webserver menu – Info

Displays all events and version numbers of the inverter.

- **Device information – devices**
  Provides information about the versions installed in the inverter. The information about the device can also be viewed without logging into the Webserver.

Function	Meaning
Name of device	Name of inverter. Can be changed by going to Settings > Basic settings.
Serial number	Inverter serial number
Article number	Article number of the inverter
UI	User interface version
MC version	Main controller software version
IOC version	I/O controller software version
HW version	Hardware version
Country setting	Shows the inverter's country setting

© 2020 KOSTAL Solar Electric GmbH

- **Device information – network**
  Provides information about the specified network settings.

Function	Meaning
Network information	**Static** The network settings were specified manually. **DHCP** The network settings are obtained automatically.
IPv4 address	Shows the specified IP address of the inverter
Subnet mask	Shows the specified subnet address
Gateway	Shows the router/gateway address
DNS server	Shows the address of the 1st and 2nd DNS server (Dynamic Name Server)
Last portal connection	Last transfer in minutes or time

- **Device information - events**
  Up to 10 events can be displayed. Additional information about the event can be displayed via Info (i) next to the event.

© 2020 KOSTAL Solar Electric GmbH

7. System monitoring

7.1 The log data 134

7.2 Retrieving, saving and graphically depicting log data 138

7.3 The KOSTAL (PIKO) Solar Portal 140

7.4 Remote service 141

© 2020 KOSTAL Solar Electric GmbH

7.1 The log data

The inverter is equipped with a data logger, which regularly records the following data from the system:

- Inverter data
- Data from external energy meters
- Grid data
- ENS data

You can find out how to retrieve, save and graphically depict log data in the following chapter **Ch. 7.2**

The log data can be used for the following purposes:

- Check operating characteristics of the system
- Determine and analyse errors
- Download and graphically depict yield data

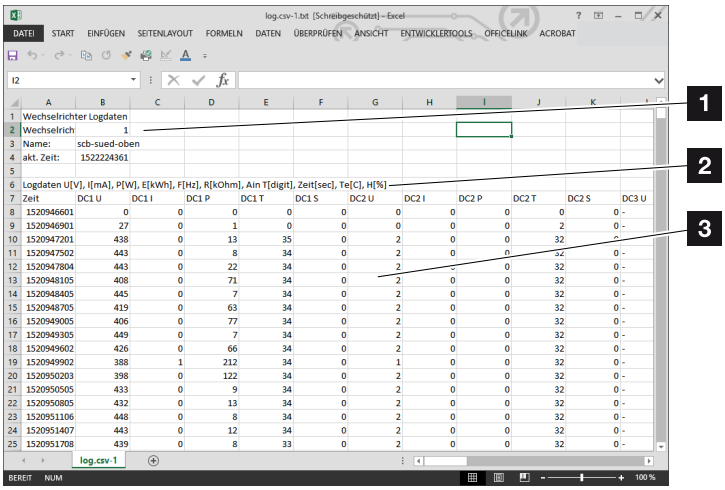

	A	B	C	D	E	F	G	H	I	J	K
1	Wechselrichter Logdaten										
2	Wechselrich	1									
3	Name:	scb-sued-oben									
4	akt. Zeit:	1522224361									
5											
6	Logdaten U[V], I[mA], P[W], E[kWh], F[Hz], R[kOhm], Ain T[digit], Zeit[sec], Te[C], H[%]										
7	Zeit	DC1 U	DC1 I	DC1 P	DC1 T	DC1 S	DC2 U	DC2 I	DC2 P	DC2 T	DC2 S	DC3 U
8	1520946601	0	0	0	0	0	0	0	0	0	0	-
9	1520946901	27	0	1	0	0	0	0	0	2	0	-
10	1520947201	438	0	13	35	0	2	0	0	32	[illegible]	-
11	1520947502	443	0	8	34	0	2	0	0	32	0	-
12	1520947804	443	0	22	34	0	2	[illegible]	0	32	0	-
13	1520948105	408	0	71	34	0	2	0	0	32	0	-
14	1520948405	445	0	7	34	0	2	0	0	32	0	-
15	1520948705	419	0	63	34	0	2	0	0	32	0	-
16	1520949005	406	0	77	34	0	2	0	0	32	0	-
17	1520949305	449	0	7	34	0	2	0	0	32	0	-
18	1520949602	426	0	66	34	0	2	0	0	32	0	-
19	1520949902	388	1	212	34	0	1	0	0	32	0	-
20	1520950203	398	0	122	34	0	2	0	0	32	0	-
21	1520950505	433	0	9	34	0	2	0	0	32	0	-
22	1520950805	432	0	13	34	0	2	0	0	32	0	-
23	1520951106	448	0	8	34	0	2	0	0	32	0	-
24	1520951407	443	0	12	34	0	2	0	0	32	0	-
25	1520951708	439	0	8	33	0	2	0	0	32	0	-

Fig. 50: Example screen "The log file"

1 File header
2 Physical variables
3 Entries in the log file

Log file: File header

The log file contains a file header with information on the inverter:

Entry	Explanation
Inverter number	Number of the inverter (always 1)
Name	Can be assigned by the user via the browser
Current time	The system time valid at the point in time of file creation in seconds. This makes allocation possible (e.g. 1372170173 Unix time stamp = 25.06.2013 16:22:53)

Tab. 5: Log file file header

INFO

Unix time stamp converter can be found online.

Log file: Physical variables

The file header is followed by the units of the physical variables. The following table explains the abbreviations for the physical variables:

Entry	Explanation
U	Voltage in volts [V]
I	Current strength in milliamps [mA]
P	Power in watts [W]
E	Energy in kilowatt hours [kWh]
F	Frequency in Hertz [Hz]
R	Resistance in kiloohms [kOhm]
T	Counting unit in points [digits]
AIn T	Counting unit in points [digits]
Time	Time in seconds [sec] since the inverter was put into operation
TE	Temperature in Celsius [°C]
H	No function [%]

Tab. 6: Physical variables in the log file

© 2020 KOSTAL Solar Electric GmbH

Log file: Entries

The units of the physical variables are followed by various entries in the log file.
The following table explains the various entries of the log file and may deviate depending upon the model:

Entry	Explanation
Time	Time in seconds of the time since the inverter went into operation
DC x U	DC voltage: Input voltage of the respective string (x = 1, 2 and 3) in V
DC x I	DC current: Input current of the respective string (x = 1, 2 and 3) in mA
DC x P	DC power: Input power of the respective string (x = 1, 2 and 3) in W
DC x T	DC temperature: Details for service. Temperature of the respective phase (x = 1, 2 and 3) in digital values
DC x S	DC status: Details for service of the respective string (x = 1, 2 and 3)
AC x U	AC voltage: Output voltage of the respective phase (x = 1, 2 and 3) in V
AC x I	AC current: Output current of the respective phase (x = 1, 2 and 3) in mA
AC x P	AC power: Output power of the respective phase (x = 1, 2 and 3) in W
AC x T	AC temperature: Details for service. Temperature of the respective phase (1, 2 and 3) in digital values
AC F	AC frequency: Grid frequency in Hz
FC I	Residual current: Measured residual current in mA
AIn1-4	Is not used
AC S	AC status: Details for service of the operational status of the inverter
ERR	General malfunctions
ENS S	Status of the ENS (device for grid monitoring with assigned switching elements): Status of grid monitoring
ENS Err	Malfunctions of the ENS (device for grid monitoring with assigned switching elements)
SH x P	External current sensor power: Power of the respective phase (x = 1, 2 and 3) in W
SC x P	Self-consumption at the respective phase (x = 1, 2 and 3) in W
HC1 P	Is not used
HC2 P	Home consumption in W from the PV modules
HC3 P	Home consumption in W from the grid
SOC H	Is not used
BAT Te	Is not used
BAT Cy	Is not used
KB S	Internal communication status when switching to AC grid
Total E	Total energy in kWh, which has been generated by the inverter and is being transferred to the AC grid in the house.
OWN E	Self-consumption: Energy in kWh currently being consumed in the house, which is covered by the inverter.

© 2020 KOSTAL Solar Electric GmbH

Entry	Explanation
HOME E	Home consumption: Energy in kWh currently being consumed in the house, which is covered by the inverter and from the AC grid.
Iso R	Insulation resistance in kOhm when switching to AC grid
Event	POR event, "power on reset": Renewed start-up of communication after a loss of AC voltage.

Tab. 7: Log data

© 2020 KOSTAL Solar Electric GmbH

7.2 Retrieving, saving and graphically depicting log data

There are several variants for retrieving and permanently saving the log data:

- **Variant 1:** Download the log data with a computer and display it
- **Variant 2:** Transfer log data to a solar portal and display it

Variant 1: Download the log data with a computer and display it

1. Call up Log data menu in the Webserver.
   Ch. 6.1
2. Select all or time period and confirm with Download.

✓ The log data (logdata.csv) can be saved onto a computer and displayed and further processed with any common program for calculating spreadsheets (e.g. Excel).

Variant 2: Transfer log data to a solar portal and display it

With a solar portal it is possible to monitor the PV system and the performance data via the Internet.

A solar portal has the following functions, which, however, may differ depending upon the portal:

- Graphic depiction of performance data
- Worldwide online access to the portal
- Email notification of errors
- Data export (e.g. Excel file)
- Long-term storage of log data

© 2020 KOSTAL Solar Electric GmbH

Prerequisites for data transfer to a solar portal:

- ✓ Inverter has an Internet connection
- ✓ Logged onto a solar portal (e.g. KOSTAL (PIKO) Solar Portal)
- ✓ Selection of a solar portal
- ✓ Activation of data transfer in the inverter

Activating data transfer to a solar portal via the control panel

1. Select the "Settings/information" menu on the control panel of the inverter.
2. Confirm with the "ENTER" key.
3. Use the "UP", "DOWN" and "ENTER" keys to select the “Solar portal” > “Portal” menu.
4. Select a solar portal
5. Press and hold down the "ENTER" key.
6. Select the "Activate" field and confirm with "ENTER".

✓ Data transfer to the solar portal is now enabled. The name of the solar portal is displayed. The data export to the solar portal is being executed.

INFO

A correctly set-up network connection/Internet connection is a prerequisite for data transfer

It may take as long as 20 minutes following activation (dependent upon the portal) until the data export is visible on the solar portal.

The KOSTAL (PIKO) Solar Portal (www.kostal-solar-portal.de) is preset as a standard solar portal.

© 2020 KOSTAL Solar Electric GmbH

7.3 The KOSTAL (PIKO) Solar Portal

The solar portal, manufactured by KOSTAL Solar Electric GmbH, is a free internet platform for monitoring PV systems.

The inverter sends the PV system's yield data and event messages to the solar portal via the internet.

The information is then stored in the solar portal. You can view and call up this information via the internet.

Prerequisites for using the solar portal

- The inverter must have a connection to the internet.
- The inverter must not yet be logged onto the Solar Portal
- The inverter must not yet be assigned to a plant.

To use the solar portal, follow these two steps:

- Activate data transfer to the solar portal in the inverter. Activation can be performed using the Webserver or the inverter menu i.
- Register (free of charge) on the KOSTAL Solar Electric GmbH website to use the KOSTAL (PIKO) Solar Portal.

INFO

If there are several inverters in a plant, data transfer to the solar portal must be set up separately for each inverter.

© 2020 KOSTAL Solar Electric GmbH

7.4 Remote service

The inverter includes smart monitoring. Should an event occur during operation, an event code for this is shown in the display.

As the operator of the system, in the event of a service call-out, you can then read out the message and obtain assistance from your installer or service partner.

By updating the software at a later date, the service team is able to directly access the inverter (if you release this option) in order to analyse the error and rectify it directly if possible.

© 2020 KOSTAL Solar Electric GmbH

8. Active power control

8.1 Why active power control? 143

8.2 Limitation of the PV feed-in capacity 144

8.3 Active power control with a ripple control receiver 145

8.4 Active power control using smart measuring systems 148

© 2020 KOSTAL Solar Electric GmbH

8.1 Why active power control?

Some countries or local energy supply companies may stipulate that the full power of the PV system must not be fed into the public grid (e.g. by limiting it to just 70%).

In this case, some energy supply companies therefore offer the owners of PV systems the possibility of have the energy supply company regulate their system using a variable active power control, and thus increasing the feed-in to up to 100% again.

Ask your energy supply company what application rule applies to you.

The planner of a PV system can usually choose between two types of active power control:

- Limitation of the feed-in capacity to a defined percentage of the PV power at the grid connection point **Ch. 8.2**
- Active power control with a ripple control receiver **Ch. 8.3**

INFO

When selecting active power control, check to determine which of the two possibilities offers the better energy yield for you.

© 2020 KOSTAL Solar Electric GmbH

8.2 Limitation of the PV feed-in capacity

If the energy supply company stipulates a limitation on PV power for your PV system and you are not able or do not want to implement active power control with a ripple control receiver, then the feed-in capacity should be reduced to the stipulated value by the energy supply company (e.g. 70 %).

Ask your energy supply company what power limitation applies to you.

The power limitation can be set by going to the inverter menu “Settings/information > Service menu > Energy management > Input or max. feed-in capacity” or using the Webserver by going to “Service menu > Energy management > Limits to [W]”.

© 2020 KOSTAL Solar Electric GmbH

8.3 Active power control with a ripple control receiver

The active power of the inverter can be controlled directly by the energy supply company via a ripple control receiver.

With this technology, the generated power can be regulated at four levels:

- 100 %
- 60 %
- 30 %
- 0 %

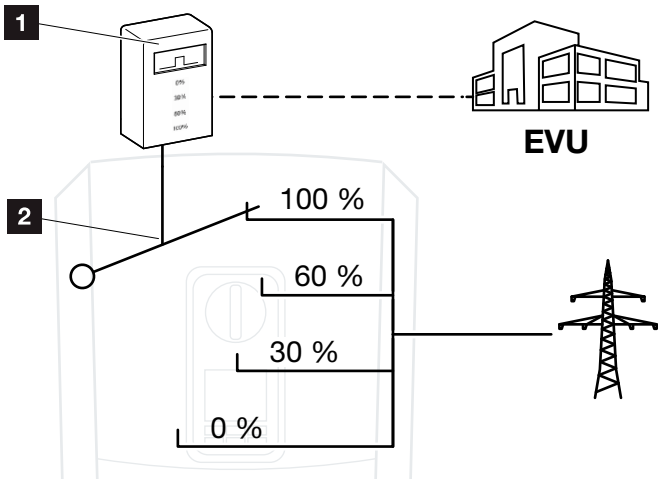

Fig. 51: Active power control with ripple control receiver

1 Ripple control receiver
2 Control electronics of the inverter

If the active power control is to be controlled by the ripple control receiver on the inverter, please perform the following steps: “Activating active power control” on page 146

If the active power control is to be controlled by another ripple control receiver, please perform the following steps: “Activating active power control” on page 146

INFO

The ripple control receiver can be connected directly to the inverter’s Smart Communication Board or is connected to another inverter.

INFO

The four standard specifications for the power limitation can be changed using the Webserver. However, the provisions of the energy supply company must be observed.

© 2020 KOSTAL Solar Electric GmbH

Activating active power control

1. Connect inverter and computer. Ch. 5.1
2. Launch an Internet browser.
3. In the address line of the browser, enter the IP address of the inverter to which the ripple control receiver is connected and confirm with "Return".

➔ The Webserver page is opened.

4. Log into the Webserver as an installer
5. Go to “Service menu > Digital inputs”.

➔ "Digital inputs" opens.

6. Select the function "Active power control".
7. If the control signals of this ripple control receiver are to be distributed in the local LAN network (home network) by means of UDP, activate the “Activate distribution of ripple control signals” item. Other inverters can therefore also be controlled using the connected ripple control receiver in the local LAN network.
8. Click on the "Save" button.

✓ The active power control is enabled.

INFO

The IP address can be read on the inverter’s display.

© 2020 KOSTAL Solar Electric GmbH

Activate receipt of control signals for active power control

If a ripple control receiver is already connected to another KOSTAL solar inverter in your home network, you can use the control signals of this ripple control receiver.

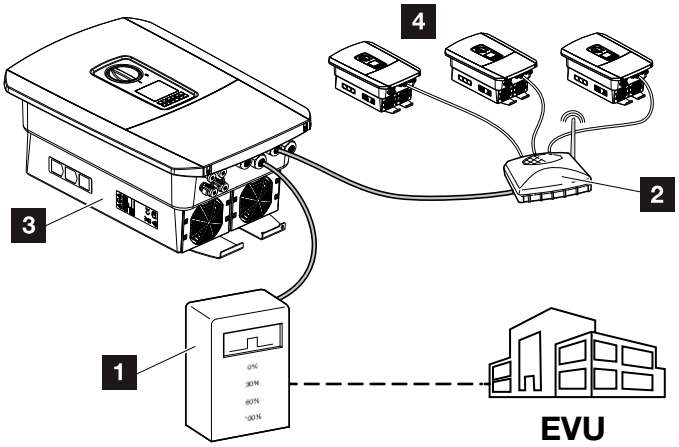

Fig. 52: Inverter with ripple control receiver

1. Ripple control receiver
2. Router / switch
3. Inverter with ripple control receiver, which distributes the control signals in the home network
4. Inverter without ripple control receiver, which uses the control signals of another ripple control receiver

Do this by performing the following steps:

1. Log into the Webserver as an installer
2. Go to “Service menu > Energy management”.

→ The “Energy management” page opens.

3. Select the “Receipt of broadcast control signals activated” function.
4. Click on the “Save” button.

✓ The receipt of broadcast control signals is active.

© 2020 KOSTAL Solar Electric GmbH

8.4 Active power control using smart measuring systems

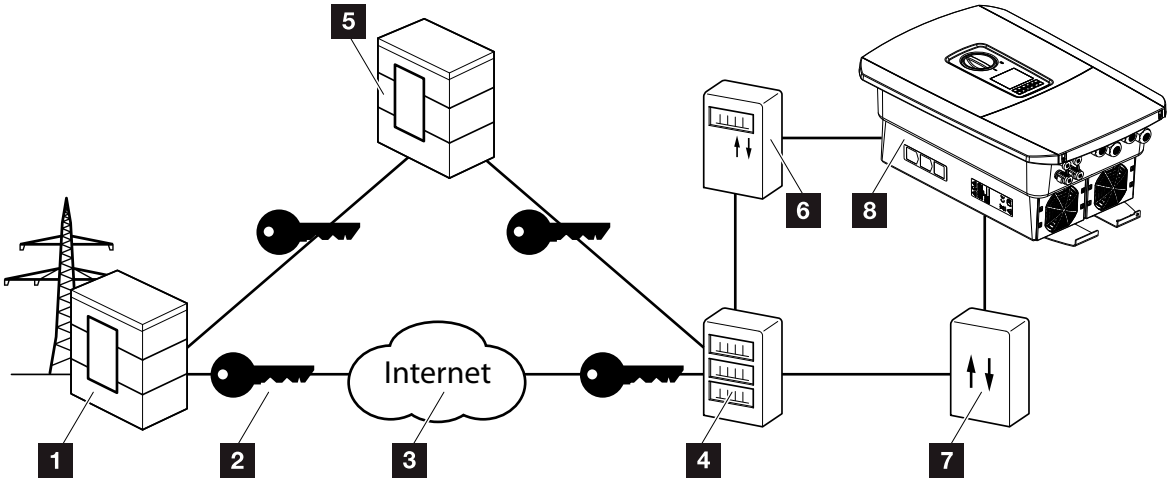

Fig. 53: Connection for smart measuring systems

1. Energy supply company
2. Encryption
3. World Wide Web (Internet)
4. Smart Meter Gateway
5. Gateway
6. Digital power meter
7. Control box
8. Inverter

Smart measuring systems have a key role to play in the energy networks of the future.

In this context, a smart measuring system comprises a measuring device (smart meter or digital power meter), which records the measurement data, and a communication unit, the Smart Meter Gateway, which transmits the data to the energy provider via a secure connection. A control box, connected to the inverter, can then be used by the energy supply company to control the inverter and thereby regulate the PV system's feed-in.

These smart measuring systems are already mandatory in some countries. Ask your energy supply company what applies to you.

© 2020 KOSTAL Solar Electric GmbH

Connecting control box

1. De-energise the inverter's terminal compartment.
   Ch. 4.3
2. Fit the control box on the top-hat rail in the control cabinet or power distributor.
3. Correctly route the communication cable from the inverter to the control cabinet and connect to the control box following wiring diagram provided by manufacturer.
4. Connect communication cable in inverter to terminal for ripple control receiver **Ch. 3.7**.
5. Connect control box to the Smart Meter Gateway.

✓ The control box is connected.

DANGER

RISK OF DEATH DUE TO ELECTRICAL SHOCK AND DISCHARGE!

De-energise device and secure against being switched on again.
Ch. 4.3

Connecting digital power meter

1. Fit digital power meter in control cabinet or power distributor.
2. Correctly route the communication cable from the inverter to the control cabinet and connect to the control box following wiring diagram provided by manufacturer.
3. Connect communication cable of digital power meter to terminal for digital energy meter in inverter
   Ch. 3.6
4. Connect digital power meter to the Smart Meter Gateway.

✓ Digital power meter is connected.

INFO

The communication cable is subject to the following requirements:

- Wire cross-section of
  0.34 - 1.5 mm² (rigid)
  0.34 - 1.0 mm² (flexible)
- Max. length 30 m
- Length of stripped insulation
  4.5-5.5 mm

INFO

The communication cable is subject to the following requirements:

- Wire cross-section of
  0.34 - 1.5 mm² (rigid)
  0.34 - 1.0 mm² (flexible)
- Max. length 30 m
- Length of stripped insulation
  4.5-5.5 mm

© 2020 KOSTAL Solar Electric GmbH

Activating active power control in the Webserver

1. Connect inverter and computer. Ch. 5.1
2. Launch an Internet browser.
3. In the address line of the browser, enter the IP address of the inverter to which the control box is connected and confirm with "Return".

➔ The Webserver page is opened.

4. Log into the Webserver as an installer.
5. Go to “Service menu > Digital inputs”.

➔ "Digital inputs" opens.

6. Select the function "Active power control".
7. If the control signals of this ripple control receiver are to be distributed in the local LAN network (home network) by means of UDP, activate the “Activate distribution of ripple control signals” item. Other inverters can therefore also be controlled using the connected ripple control receiver in the local LAN network.
8. Click on the "Save" button.

✓ The active power control is enabled.

INFO

The IP address can be read on the inverter’s display.

© 2020 KOSTAL Solar Electric GmbH

9. Self-consumption

9.1 Self-consumption overview 152

9.2 Electrical connection for self-consumption 153

9.3 Setting up self-consumption control 155

© 2020 KOSTAL Solar Electric GmbH

9.1 Self-consumption overview

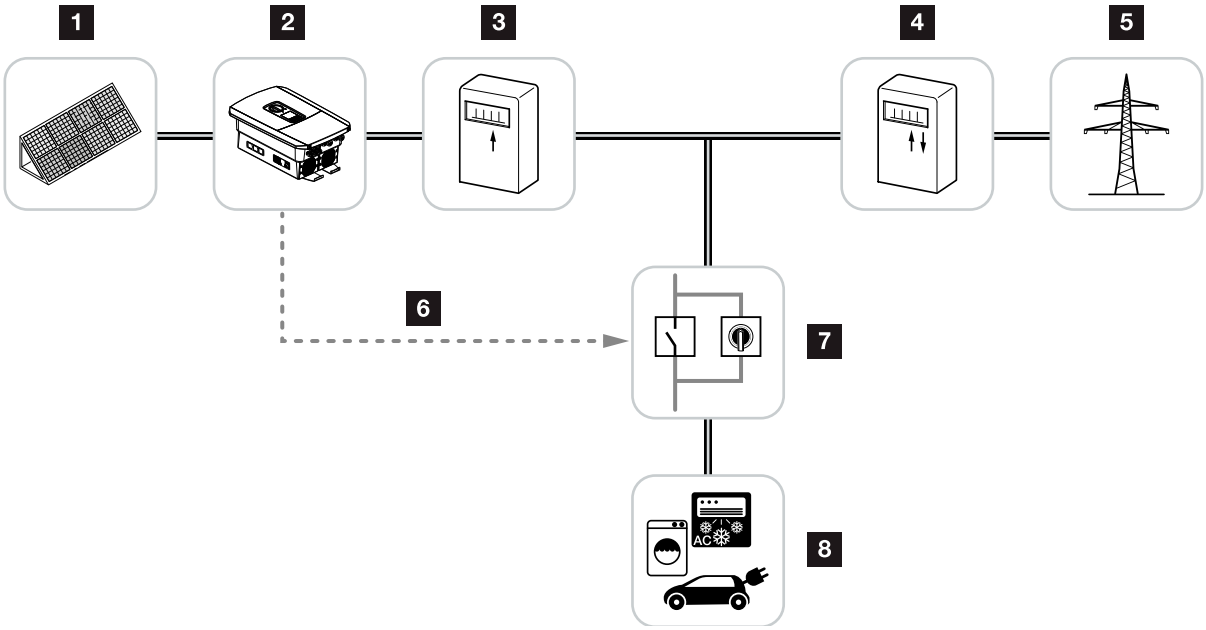

Fig. 54: Configuration of self-consumption

1 Photovoltaic modules
2 Inverter
3 Production meter
4 Feed meter / consumption meter
5 Public grid
6 Control signal from Smart Communication Board (self-consumption terminal)
7 External load relay with jumper switch
8 Consumer device

All inverters are designed in such a way that the generated current can be used for self-consumption.

© 2020 KOSTAL Solar Electric GmbH

9.2 Electrical connection for self-consumption

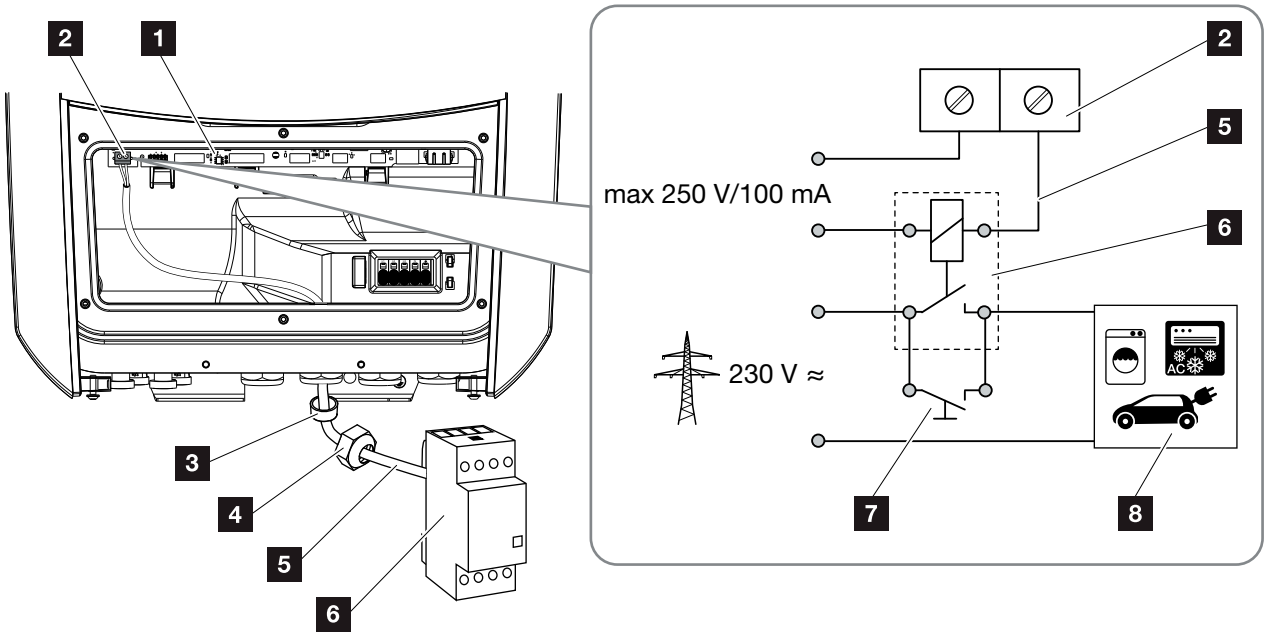

Fig. 55: Electrical connection for self-consumption

1 Smart Communication Board (SCB)
2 Terminal for self-consumption
3 Sealing ring
4 Union nut
5 Control line
6 Load relay
7 Jumper switch
8 Consumer device

© 2020 KOSTAL Solar Electric GmbH

Proceed as follows for the electrical connection for self-consumption:

1. De-energise the home network. **Ch. 4.3**
2. Correctly connect load relay to the terminal for self-consumption on the Smart Communication Board. **Fig. 55, It. 2**
3. Properly install and connect the additional components for self-consumption.

✓ The electrical connection for self-consumption is complete. Switch on the inverter.

DAMAGE POSSIBLE

An external load relay must be installed between inverters and devices. No consumers may be connected directly to the inverter!

Loading of switched output:
max. loading: 100 mA
Max. voltage: 250 V (AC or DC)

DANGER

RISK OF DEATH DUE TO ELECTRICAL SHOCK AND DISCHARGE!

De-energise device and secure against being switched on again.
Ch. 4.3

INFO

The control line is subject to the following requirements:

- Wire cross-section of
  0.14 - 2.5 mm² (rigid)
  0.14 - 1.5 mm² (flexible)
- Max. length 30 m
- Length of stripped insulation 5.5-6.5 mm

© 2020 KOSTAL Solar Electric GmbH

9.3 Setting up self-consumption control

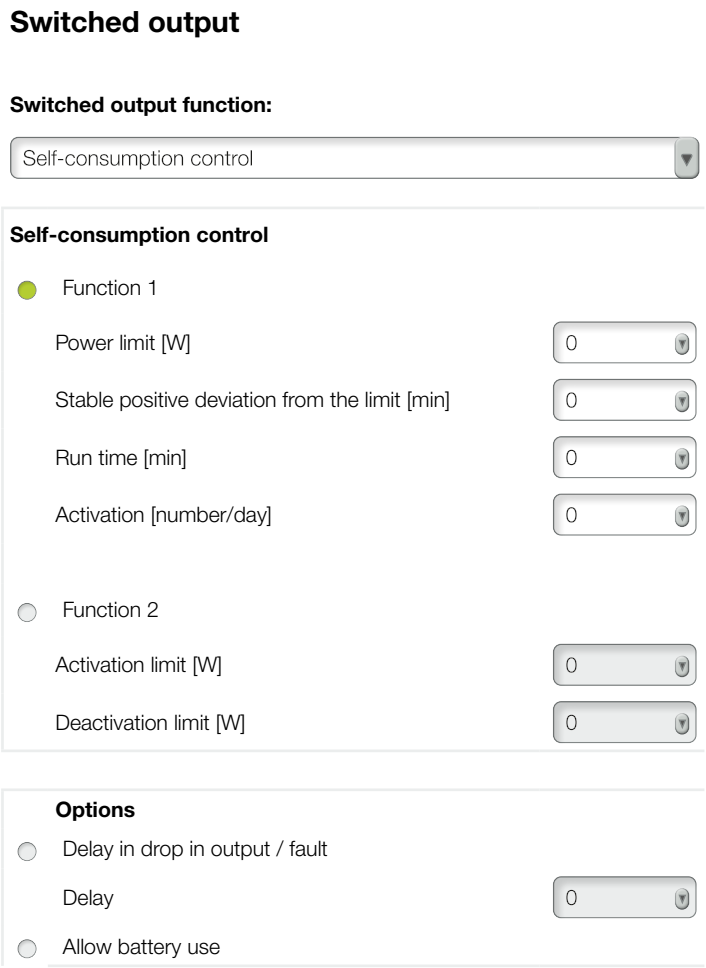

Fig. 56: Self-consumption control functions for Webserver

Several functions are available here to enable the user to control self-consumption. You will find a more accurate explanation on the following pages.

© 2020 KOSTAL Solar Electric GmbH

Activating self-consumption control

1. Calling up Webserver
2. Go to “Service menu > Switched output”
3. In the "Switched output function" field, select the option "Self-consumption control" or "Dynamic self-consumption control".
4. Choose function 1 or function 2.
5. Enter values for the function.
6. Activate and enter optional value for "Delay in drop in output/fault" with a check box.
7. Click on “Save”.

✓ The self-consumption control function is active.

INFO

When selecting "Dynamic self-consumption control", the measured home consumption determined using the digital energy meter is automatically added to the set value and taken into consideration.

INFO

You can find more detailed explanations regarding the selection of function 1 or 2 in the course of the chapter.

INFO

The command "Delay in drop in output/fault" can be used for function 1 and 2.

© 2020 KOSTAL Solar Electric GmbH

Self-consumption control function 1

Control of self-consumption by time

When a certain rating **P1** has been generated for a certain period of time **T1**, the inverter switches to self-consumption.

The inverter remains in self-consumption mode for the entire run time **T2**. Following the run time **T2**, the inverter ends self-consumption.

This is the end of the interval. This interval can be repeated several times with the "Activation" option.

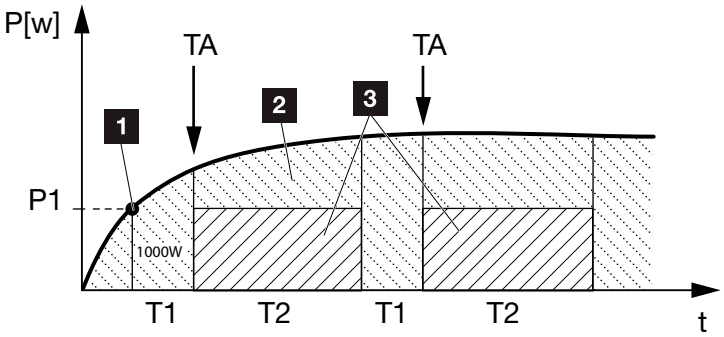

Fig. 57: Self-consumption graph (Function 1)

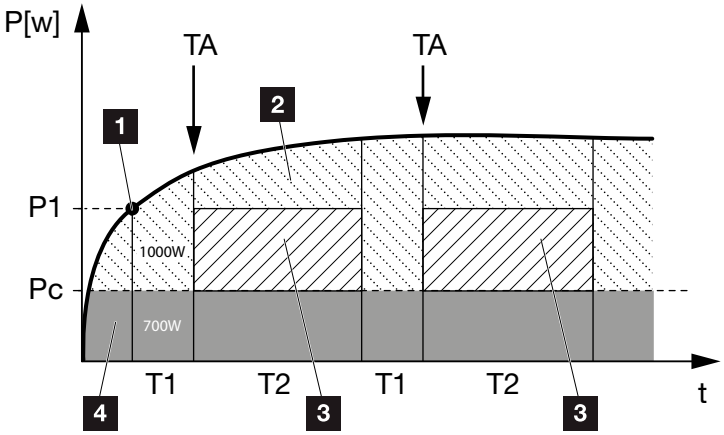

Fig. 58: Dynamic self-consumption graph (Function 1)

Power limit

1. Power limit
2. Feed-in to the public grid
3. Self-consumption via self-consumption contact
4. Self-consumption in the home network

INFO

When selecting "Dynamic self-consumption control", the measured home consumption Pc (e.g. 700 W in this case) is taken into consideration and automatically added to the set power limit P1. In our example, this means that the contact only closes at 1700 W.

© 2020 KOSTAL Solar Electric GmbH

P1: Power limit
This is the minimum power (in watts) that must be produced (e.g. 1000W) before the consumer is switched on. You can enter any value from 1 watt to 999 000 watts.

T1: Period of stable exceeding of the output limit (P1)
The inverter must exceed the set "power limit" for this period of time (in minutes) before the consumer is switched on. You can enter any value from 1 to 720 minutes (= 12 hours).

T2: Run time
The connected consumer is switched on for this period (in minutes) when both of the above conditions have been met. You can enter any value between 1 and 1440 minutes (= 24 hours). The run time ends when the inverter shuts off. The run time is ended and not continued again if the inverter has not produced any current for three hours.

TA: Activation
Dashed area: Self-consumption at v self-consumption terminal active
The number **TA** (number/day) indicates how often self-consumption is activated each day.

Pc: Level of self-consumption
Grey area: Self-consumption in home network
This is taken into account in the dynamic self-consumption control. This means the self-consumption contact is only closed when power limit P1 less the self-consumption reaches the set value.

© 2020 KOSTAL Solar Electric GmbH

Self-consumption control function 2

Control of self-consumption by rating

When a certain rating **P1** has been generated (e.g. 1000 W), the inverter switches to self-consumption.

When the rating **P2** is not achieved (e.g. 700 W), the inverter ends self-consumption and resumes feeding current into the grid.

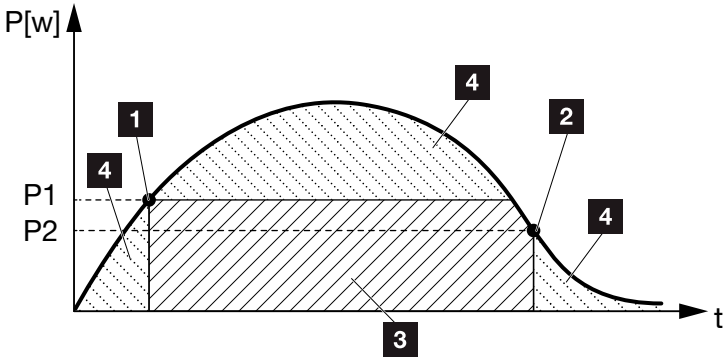

Fig. 59: Self-consumption graph (Function 2)

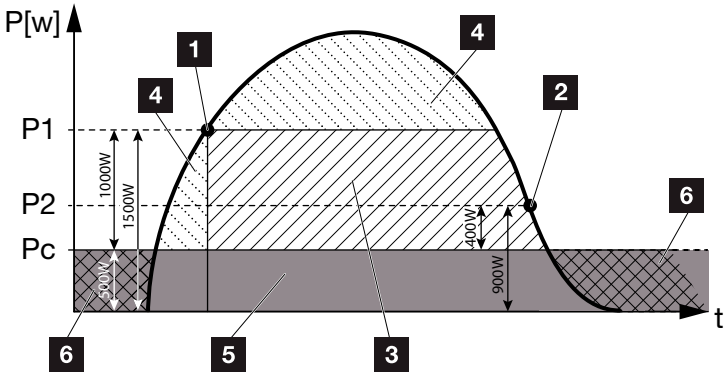

Fig. 60: Dynamic self-consumption graph (Function 2)

1. Activation limit
2. Deactivation limit
3. Self-consumption via self-consumption contact
4. Feed-in to the public grid
5. Self-consumption in the home network
6. Purchased from the public grid

INFO

When selecting "Dynamic self-consumption control", the measured home consumption Pc, e.g. 500 W, is taken into consideration and automatically added to the set power limit P1, e.g. 1000 W, and P2, e.g. 400 W. This means that the contact does not close until 1500 W and opens again at 900 W.

© 2020 KOSTAL Solar Electric GmbH

P1: Activation limit
This is the minimum power (in watts) that must be produced before the consumer is activated.
You can enter any value from 1 watt to 999 000 watts.

P2: Deactivation limit
The consumer is switched off when the power generated falls below this value.

Pc: Level of self-consumption
Grey area: Self-consumption in home network
This is taken into account in the dynamic self-consumption control. This means the self-consumption contact is only closed when power limit P1 less the self-consumption reaches the set value.

© 2020 KOSTAL Solar Electric GmbH

Delay in drop in output/fault

Delay time for switching off self-consumption

With this function, self-consumption is only discontinued after the set delay time **T1**. In the event of power loss, fault **(Tx)** and the failure to achieve the shutdown limit, the consumer remains switched on for the set time **(T1)**.

If the fault period or the period of power loss is shorter than the set delay time, self-consumption remains activated.

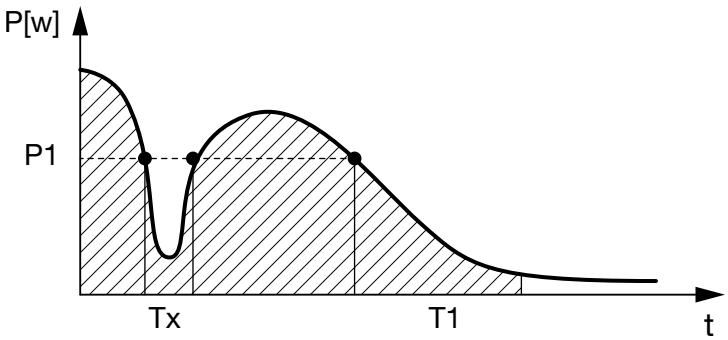

Fig. 61: Brief delay in drop in output/fault

P1: Power limit

T1: Delay time in the event of power loss/fault

Tx: Fault, power loss or failure of the inverter

Dashed area: Self-consumption active

© 2020 KOSTAL Solar Electric GmbH

10. Maintenance

10.1 Maintenance and cleaning 163

10.2 Housing cleaning 164

10.3 Fan cleaning 165

10.4 Updating software 169

10.5 Event codes 171

© 2020 KOSTAL Solar Electric GmbH

10.1 Maintenance and cleaning

Once correctly installed, the inverter runs virtually maintenance-free.

The following maintenance tasks are to be carried out for the inverter:

Activity	Interval
Check cable connections and plugs	1x annually
Clean fans **Ch. 10.1**	1x annually

Tab. 8: Maintenance list

If no maintenance work is carried out, this results in an exclusion of the warranty (see 'Exclusion of warranty' in our Service and warranty conditions).

DAMAGE POSSIBLE

Dirty or blocked fans mean that the inverter is not adequately cooled. Insufficient cooling of the inverter may result in output reduction or the failure of the system.

Always mount inverters in such a way that falling parts cannot fall into the inverter through the ventilation grille.

© 2020 KOSTAL Solar Electric GmbH

10.2 Housing cleaning

The housing may only be wiped down with a damp cloth. Abrasive cleaners are not permitted.

© 2020 KOSTAL Solar Electric GmbH

10.3 Fan cleaning

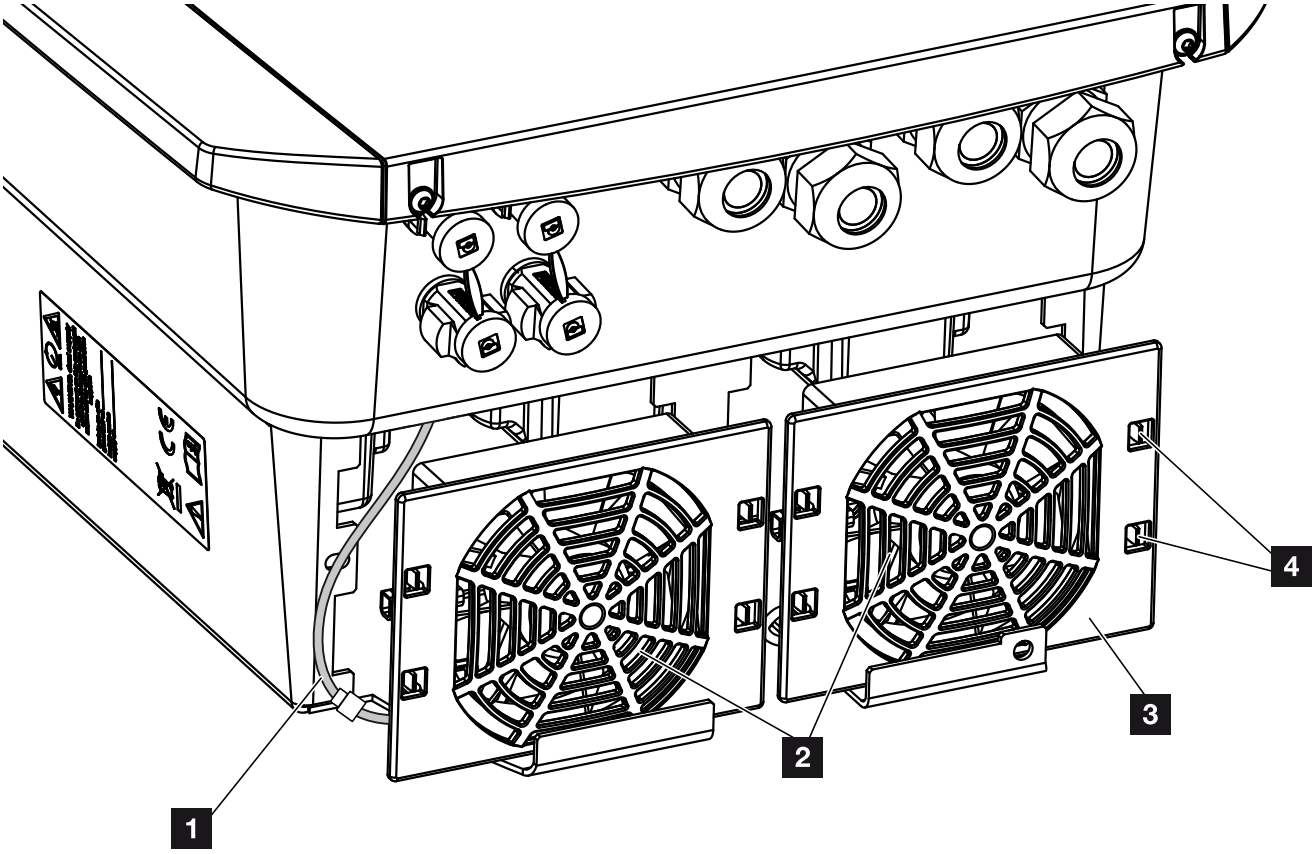

Fig. 62: Fan disassembly overview

1 Fan cable
2 Fan
3 Fan grill
4 Fastening straps

© 2020 KOSTAL Solar Electric GmbH

Procedure

The fan may only be removed and cleaned if the inverter is switched off. Otherwise, the fan may start up.

1. Turn the DC switch on the inverter to OFF. **Fig. 10**
2. Dismantle the fan. To do this, place a screwdriver at the edge of the fan grill and apply a little pressure to the fan grill. **Fig. 63**

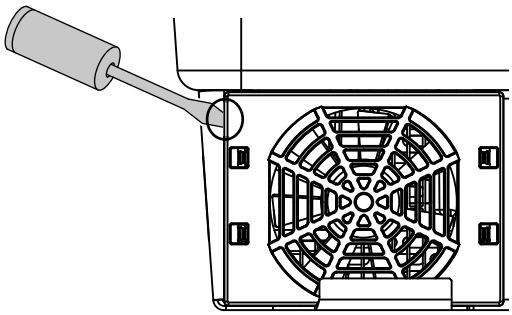

Fig. 63: Loosen fan grill

3. Press the fastening straps toward the centre of the fan with a second screwdriver.
   Pull the fan unit slightly forward. **Fig. 64**

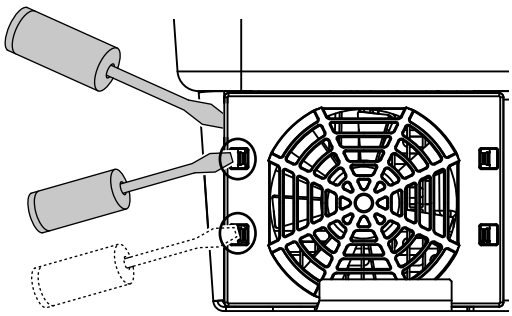

Fig. 64: Loosen fastening straps

© 2020 KOSTAL Solar Electric GmbH

4. Completely remove the fan unit from the housing. To do this, disconnect the plug of the fan cable. **Fig. 65**

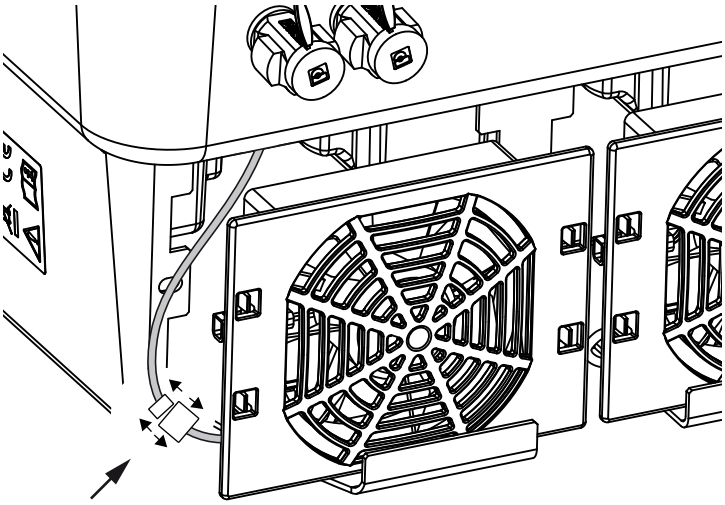

Fig. 65: Pull out fan cable

5. The fan can also be pulled off the fan grill. To do this, press the fastening straps slightly outward and pull off the fan. **Fig. 66**

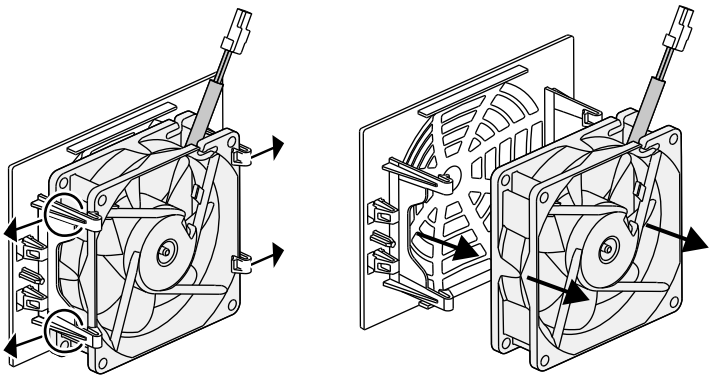

Fig. 66: Disassembly of the fan grill

6. Clean fan and housing opening with a soft brush.

IMPORTANT INFORMATION

Note the cable guide inside the housing.

When installing the fan, the fan cable must be relaid in exactly the same way.

© 2020 KOSTAL Solar Electric GmbH

7. Note the following when installing the fan:
   - The fan must be correctly installed in the fan frame (air flow direction). **Fig. 67**
   - The cable must point into the housing.
   - The cable of the fan must not be jammed.

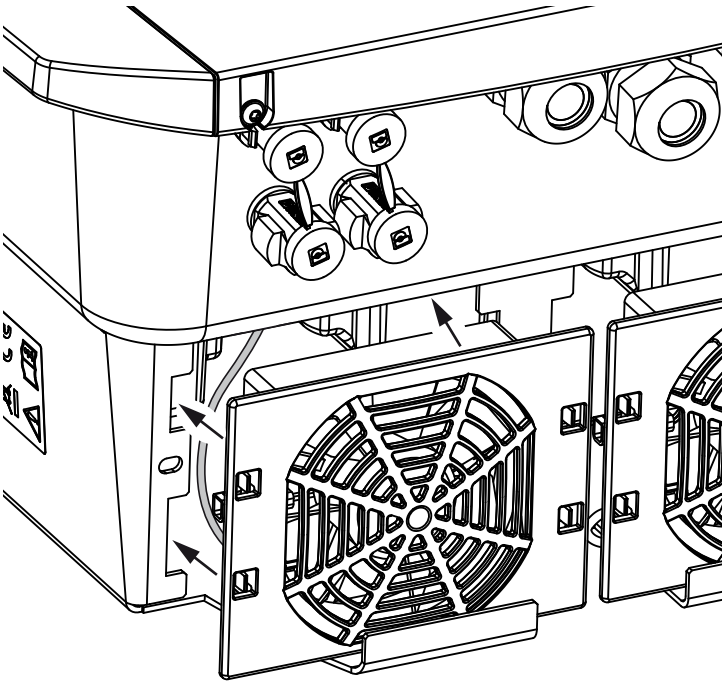

Fig. 67: Fan installation

8. Reconnect the fan cable and insert the fan into the housing. When switching on for the first time, check whether the air from the fan is drawn inwards.
9. Start up the inverter **Ch. 4.1**

IMPORTANT INFORMATION

When installing the fan ensure that the cables are laid so that they do not run into the fan. If this is not done, the fan may fail or noise may result.

© 2020 KOSTAL Solar Electric GmbH

10.4 Updating software

When the manufacturer updates the software, the user has the option of updating his or her version too. In the process, the software and the user interface (UI) of the Smart Communication Board are brought completely up-to-date. If an update is available, you will find this on the manufacturer's website, in the download area for the product.

Procedure

- Updating using Webserver

© 2020 KOSTAL Solar Electric GmbH

Updating using Webserver

Updating the inverter using the Webserver is a very simple process. To do this, simply select the update file (*.swu) on the computer via the Webserver and start the installation.

1. Download the update for the inverter from the manufacturer's website to your computer.
2. Call up the Webserver **Ch. 6.2**
3. Go to “Update”.
4. Click on the “Select file” button and select the update file (*.swu) on the computer or drag the update file into the field.
5. Start the installation using “Run”.

➔ The inverter recognises the update file and starts the installation.

6. If you want to install the update, confirm the question with “OK”.

➔ The update is installed on the inverter. Once the update has been installed, the inverter is restarted. The update may take up to 10 minutes. Following the update, the successful installation is shown on the installer’s display.

7. Once the update has been successfully installed, the current software version can be queried on the inverter or Webserver.
   This is done in the inverter's menu by going to: Settings/information > Device information or in the Webserver by going to Info.

✓ The update has been installed.

INFO

Following a successful update, the inverter automatically returns to feed-in mode.

© 2020 KOSTAL Solar Electric GmbH

10.5 Event codes

There is no need to take action when an event occurs occasionally or only briefly and the device resumes operation. When an event occurs over long periods or recurs frequently, the cause must be determined and rectified.

In case of a permanent event, the inverter interrupts the feed-in and switches off automatically.

- Check whether the DC switch or the external DC voltage separator has been switched off.
- Check whether the event is due to a mains power failure, or whether the fuse between the feed meter and the inverter has tripped.

If the fuse has tripped, notify the installer; if there is a power failure, simply wait until the grid operator has corrected the problem.

If the event lasts only a short time (grid fault, overheating, overload, etc.), then the inverter will automatically resume operation as soon as the event has been resolved.

If the event persists, notify your installer or the manufacturer's customer support team.

Provide the following information:

- Device type and serial number. You will find this information on the type plate on the exterior of the housing.
- Description of fault
  (LED display and display message).

The type of event can be determined on the basis of the message in the display "<Code> <Fault type>" and the following table.

In the case of events not listed in the table, please contact the Service team.

DANGER

RISK OF DEATH DUE TO ELECTRICAL SHOCK AND DISCHARGE!

Life-threatening voltages are present in the inverter. Only a qualified electrician may open and perform work on the device.

INFO

You can find contact details in the chapter "Warranty and service":
Ch. 13.2

© 2020 KOSTAL Solar Electric GmbH

Type of event	General explanation and actions
System fault	If this error is displayed, the inverter should generally be restarted. To do this, use the DC switch to switch the inverter off. Only switch it on again after 5 minutes. If this does not help, please contact your installer or call our hotline.
Overheating	The device has got too hot. Switch the device off for approx. 20 min. If the error occurs several times/permanently, please contact the support team.
External fault	Please contact your installer
Grid fault	Please contact your installer
Fan fault	Please contact your installer

Event code	LED	Type of event	Description / possible cause	Measure
5002		System fault	Welded DC main relay detected	Restart device[1]
5003		System fault	Welded DC main relay detected	Restart device[1]
5005		System fault	Welded DC main relay detected	Restart device[1]
5006		System fault	Relay or activation potentially defective	Restart device[1]
5008		Excess temperature	Overheating, AC/DC power level	Switch off device and allow to cool off. Check installation conditions and fan[1]
5009		Excess temperature	Overheating, processor	Switch off device and allow to cool off. Check installation conditions and fan[1]
5010		System fault	Relay or activation potentially defective	Restart device[1]
5011		System fault	Relay or activation potentially defective	Restart device[1]
5012		External generator fault	Overvoltage on PV generator	Check generator installation/layout[1]
5013		Information	Power curtailment through external specifications (grid operator)	No action necessary[1]
5014		Information	Power curtailment due to a grid fault (increased grid frequency)	No action necessary[1]
5016		External generator fault	Overvoltage on PV generator DC1	Check generator installation/layout[1]
5018		External generator fault	Overvoltage on PV generator DC2	Check generator installation/layout[1]
5020		External generator fault	Overvoltage on PV generator DC3	Check generator installation/layout[1]

© 2020 KOSTAL Solar Electric GmbH

Event code	LED	Type of event	Description / possible cause	Measure
5022	●	External generator fault	Overheating, AC/DC power level	Switch off device and allow to cool off. Check installation conditions and fan[1]
5023	●	Battery malfunction	Incorrect battery type selected	Set the right battery type in the inverter.
5024	☀	System fault	Hardware error	Restart device[1]
5025	☀	System fault	Hardware error	Restart device[1]
5026	☀	System fault	Hardware error	Restart device[1]
5035	●	System fault	Internal system fault	Check generator installation/layout[1]
5040	☀	External generator fault	Overcurrent event on DC string 1	Check generator installation/layout[1]
5041	☀	External generator fault	Overcurrent event on DC string 2	Check generator installation/layout[1]
5042	☀	External generator fault	Overcurrent event on DC string 3	Check generator installation/layout[1]
5043	●	External generator fault	Overcurrent event on generator	Check generator installation/layout[1]
5046	●	Battery communication fault	Internal communication error	Restart device[1]
5049	●	Excess temperature	Overheating, processor	Switch off device and allow to cool off. Check installation conditions and fan[1]
5052	●	External generator fault	Overcurrent on the PV generator	Check generator installation/layout[1]
5055	●	External grid fault	Residual current too high	There may be a weather-related problem. Check inverter / generator installation[1] Check generator insulation resistance. Potential PV generator error (too many PV modules).
5057	●	External grid fault	Insulation resistance too low	There may be a weather-related problem. Check inverter / generator installation[1]
5059	○	External grid fault	Grid conditions are not within the valid range	No action necessary. If the error occurs frequently, check installation and associated grid values.

© 2020 KOSTAL Solar Electric GmbH

Event code	LED	Type of event	Description / possible cause	Measure
5061	○	External grid fault	Grid conditions are not within the valid range	No action necessary. If the error occurs frequently, check installation and associated grid values.
5062	○	External grid fault	Grid conditions are not within the valid range	No action necessary. If the error occurs frequently, check installation and associated grid values.
5063	○	External grid fault	Grid conditions are not within the valid range	No action necessary. If the error occurs frequently, check installation and associated grid values.
5064	○	External grid fault	Grid conditions are not within the valid range	No action necessary. If the error occurs frequently, check installation and associated grid values.
5065	○	External grid fault	Grid conditions are not within the valid range	No action necessary. If the error occurs frequently, check installation and associated grid values.
5066	○	External grid fault	Grid conditions are not within the valid range	No action necessary. If the error occurs frequently, check installation and associated grid values.
5067	●	External grid fault	Device error	No action necessary[1]
5068	●	External generator fault	Overvoltage on PV generator	Check generator installation/layout[1]
5069	●	System fault	Device error	No action necessary[1]
5070	●	System fault	Hardware error	Contact support
5071	●	System fault	Hardware error	Contact support
5074	●	Excess temperature	Temperature of inverter is too high	Restart device[1]
5075	●	External grid fault	Overcurrent, AC grid	Restart device[1]
5076	●	System fault	Internal system error	Restart device[1]
5077	○	Information	Power curtailment through external specifications (grid operator)	No action necessary[1]
5078	○	Information	Power curtailment through external specifications (grid operator)	No action necessary[1]
5084	●	System fault	Sensor information cannot be retrieved	Restart device[1]

© 2020 KOSTAL Solar Electric GmbH

Event code	LED	Type of event	Description / possible cause	Measure
5085	●	System fault	Internal system error	Restart device[1]
5086	●	System fault	Internal system error	Restart device[1]
5087	☀	Battery communication fault	Communication cable to battery faulty	Restart device[1]
5087	☀	Battery malfunction	Battery faulty	Restart device[1]
5088	☀	Battery malfunction	Battery faulty	Restart device[1]
5089	☀	Battery malfunction	Battery faulty	Restart device[1]
5090	☀	Energy meter fault	Energy meter faulty	Restart device[1]
5091	●	External generator fault	Negative voltage on PV generator 0	Check generator installation/layout[1]
5092	●	External generator fault	Negative voltage on PV generator 1	Check generator installation/layout[1]
5093	●	External generator fault	Negative voltage on PV generator 2	Check generator installation/layout[1]
5094	●	External generator fault	Negative voltage on PV generator 3	Check generator installation/layout[1]
5095	☀	Battery malfunction	Problem with battery connection	Check battery connection. Restart device[1]
5096	●	External grid fault	External grid fault	Restart device[1]
6002	●	Battery communication fault	Communication cable to battery faulty	Check the communication connection to the battery[1]
6004	☀	Fan fault	Fan unit dirty	Check and/or clean fan[1]
6005	☀	Fan fault	Fan unit dirty	Check and/or clean fan[1]
6006	●	System fault	Sensor information cannot be retrieved	Check connection to energy meter[1]
6007	●	System fault	Internal system fault	Contact support
6009	●	Battery communication fault	Communication cable to battery faulty	Check communication cable to the battery[1]
6010	●	Fan fault	Fan unit defective	Check fan[1]
6011	●	Fan fault	Fan unit dirty or defective	Check and/or clean fan[1]
6012	●	Fan fault	Fan unit dirty or defective	Check and/or clean fan[1]
6013	●	Fan fault	Fan unit dirty or defective	Check and/or clean fan[1]

© 2020 KOSTAL Solar Electric GmbH

Event code	LED	Type of event	Description / possible cause	Measure
6202	●	Internal parameterization fault	Hardware error	Contact support
6203	●	Battery malfunction	Hardware error	Contact support
6204	●	Battery malfunction	Hardware error	Contact support
6205	●	Battery malfunction	Communication cable to battery faulty	Check communication cable to the battery[1]
6206	●	Battery malfunction	Communication cable to battery faulty	Check communication cable to the battery[1]
6207	●	Battery malfunction	Hardware error	Contact support
6208	●	Battery malfunction	Hardware error	Contact support
6209	●	Battery malfunction	Excessive ambient temperature	Switch off device and allow to cool off. Check installation conditions[1]
6210	●	Battery malfunction	Communication cable to battery faulty	Check communication cable to the battery[1]
6211	●	Battery malfunction	Communication cable to battery faulty	Check communication cable to the battery[1]
6212	●	Battery malfunction	Hardware error	Contact support
6213	●	Battery malfunction	Fuses defective or wiring error	Check/replace fuses. Check wiring[1]
6214	●	Battery malfunction	Fuses defective or wiring error	Check/replace fuses. Check wiring[1]
6215	●	Battery malfunction	Internal system error	Check device installation on AC side
6250	●	Battery malfunction	Internal system error	No action necessary[1]
6251	●	Battery malfunction	Internal system error	No action necessary[1]
6252	●	Battery malfunction	Internal system error	Battery needs charging via generators
6253	●	Battery malfunction	Internal system error	Contact support
6254	●	Battery malfunction	Excessive ambient temperature	Reduce ambient temperature. Check installation conditions
6255	●	Battery malfunction	Ambient temperature too high or problem with temperature measurement	Contact support
6256	●	Battery malfunction	Excessive ambient temperature	Reduce ambient temperature. Check installation conditions
6257	●	Battery malfunction	Ambient temperature too low or problem with temperature measurement	Contact support

© 2020 KOSTAL Solar Electric GmbH

Event code	LED	Type of event	Description / possible cause	Measure
6258	●	Battery malfunction	Internal system error	No action necessary[1]
6259	●	Battery malfunction	Hardware error	Contact support
6260	●	Battery malfunction	Internal system error	No action necessary[1]
6261	●	Battery malfunction	Hardware error	Contact support
6262	●	Battery malfunction	Incorrect number of modules set	Correct number of modules
6263	●	Battery malfunction	Hardware error	Contact support
6264	●	Battery malfunction	Hardware error	Contact support
6265	●	Battery malfunction	Interruption on communication cables or incorrect number of modules set	Check communication cables, correct number of modules[1]
6266	○	Information	Internal system error	No action necessary[1]
6267	○	Information	Internal system error	No action necessary[1]
6268	●	Battery malfunction	Hardware error	Contact support

Tab. 9: Event codes

[1] If the error occurs several times/permanently, please contact Support.

© 2020 KOSTAL Solar Electric GmbH

Legend for the "Event codes" table

- LED flashing (warning)
- LED lit up (error)
- LED is off (information)

© 2020 KOSTAL Solar Electric GmbH

11. Technical data

11.1 Technical data 180

11.2 Block diagram 185

© 2020 KOSTAL Solar Electric GmbH

11.1 Technical data

Subject to technical changes. Errors excepted.
You can find current information at www.kostal-solar-electric.com.

Inverter	Unit	3.0	4.2	5.5	7.0	8.5	10
Input side (DC)							
Inverter type		PIKO IQ					
Max. PV power (cos φ = 1)	kWp	4.5	6.3	8.25	10.5	12.75	15
Max. PV power per DC input	kWp	6.5					
Nominal DC power	kW	3.09	4..33	5.67	7.22	8.76	10.31
Rated input voltage ($U_{DC,r}$)	V	570					
Start input voltage ($U_{DCstart}$)	V	150					
Input voltage range (U_{DCmin} - U_{DCmax})	V	120...1000					
MPP range at rated output in single-tracker operation (U_{MPPmin})	V	240...720[5]	350...720[5]	450...720[5]	-	-	-
MPP range at rated output in two-tracker operation (U_{MPPmin})	V	180...720[5]	180...720[5]	225...720[5]	290...720[5]	345...720[5]	405...720[5]
MPP working voltage range ($U_{MPPworkmin}$ - $U_{MPPworkmax}$)	V	120...720[5]					
Max. working voltage ($U_{DCworkmax}$)	V	900					
Max. input current (I_{DCmax}) per DC input	A	13					
Max. PV short-circuit current (I_{SC_PV}) per DC input	A	16.25					
Number of DC inputs		2					
Number of independent MPP trackers		2					

© 2020 KOSTAL Solar Electric GmbH

Inverter	Unit	3.0	4.2	5.5	7.0	8.5	10
Output side							
Rated output, cos φ = 1 ($P_{AC,r}$)	kW	3.0	4.2	5.5	7.0	8.5	10
Max. output apparent power, cos $\varphi_{,adj}$	kVA	3.0	4.2	5.5	7.0	8.5	10
Min. output voltage (U_{ACmin})	V	320					
Max. output voltage (U_{ACmax})	V	460					
Rated output current	A	4.33	6.06	7.94	10.10	12.27	14.43
Max. output current (I_{ACmax})	A	4.81	6.74	8.82	11.23	13.63	16.04
Switch-on current (I_{Inrush})	A	2.46	2.46	2.46	6.72	6.72	6.72
Short-circuit current (peak/RMS)	A	6.8/4.8	9.5/6.7	12.5/8.8	15.9/11.2	19.3/13.6	22.8/16.1
Number of feed-in phases		3					
Grid connection		3N~, AC, 400V					
Rated frequency (fr)	Hz	50					
Grid frequency (f_{min} - f_{max})	Hz	47/52.5					
Setting range of the power factor cos $\varphi_{AC,r}$		0.8...1...0.8					
Power factor for rated power (cos $\varphi_{AC,r}$)		1					
Max. THD	%	3					
Device properties							
Standby	W	7.9					
Standby incl. 24h home-consumption measurement	W	7.9					
Efficiency							
Max. efficiency	%	97.1	97.1	97.1	97.2	97.2	97.2
European efficiency	%	95.3	95.5	96.2	96.5	96.5	96.5
MPP adjustment efficiency	%	99.9					

© 2020 KOSTAL Solar Electric GmbH

Inverter	Unit	3.0	4.2	5.5	7.0	8.5	10
System data							
Topology: Without galvanic isolation – transformerless		✓					
Protection class according to IEC 60529 (housing/fan)		IP 65					
Protective class in accordance with IEC 62103		I					
Overvoltage category according to IEC 60664-1 input side (PV generator)[1]		II					
Overvoltage category according to IEC 60664-1 output side (grid connection)[2]		III					
Degree of contamination[3]		4					
Environmental category (outdoor installation)		✓					
Environmental category (indoor installation)		✓					
UV resistance		✓					
Cable diameter of AC connection cable (min-max)		8...17					
Cable cross-section of AC connection cable (min-max)	mm^2	1.5...6			2.5...6		4...6
Cable cross-section of DC connection cable (min-max)	mm^2	2.5...6					
Torque of screws in terminal compartment	Nm	2					
Torque of screws in cover	Nm	1.5					
Max. fusing on output side according to IEC 60898-1		B16 / C16					B25 / C25
Compatibility with external residual current protection devices (as of FW 01.14)		Type A RCD					
Internal operator protection according to EN 62109-2 (compatible with type A RCB as of FW 01.14)		✓					
Independent disconnection device according to VDE V 0126-1-1[4]		✓					
Electronic DC disconnection device integrated		✓					

© 2020 KOSTAL Solar Electric GmbH

Inverter	Unit	3.0	4.2	5.5	7.0	8.5	10
Reverse polarity protection, DC-side		✓					
Height/width/depth	mm (inch)	563 / 405 / 233 (22.17 / 15.94 / 9.17)					
Weight	kg (lb)	17,9 (39.46)			19,6 (43.87)		
Cooling principle – regulated fans		✓					
Max. air throughput	m^3/h	184					
Max. noise emission (typical)[6]	dBA	39					
Ambient temperature	°C (°F)	-20...60 (-4...140)					
Max. operating altitude above sea level	m (ft)	2000 (6562)					
Relative humidity	%	4…100					
Connection technology, DC side		SUNCLIX plug					
Connection technology, AC side		Spring-type terminal strip					
Interfaces							
Ethernet LAN (RJ45)		1					
Connection of energy meter for collecting energy data (Modbus RTU)		1					
Digital inputs (e.g. for digital ripple control receiver)		4					
Potential-free contact for self-consumption control		1					
USB 2.0		1					

© 2020 KOSTAL Solar Electric GmbH

Inverter	Unit	3.0	4.2	5.5	7.0	8.5	10
Webserver (user interface)					✓		
Warranty							
Warranty following registration with the KOSTAL Solar online shop (*without registering)	Years				5 (2*)		
Warranty extension optional	Years				5 / 10 / 15		
Directives / Certification							
CE, GS, CEI 0-21, CEI10/11, EN 62109-1, EN 62109-2, EN 60529, EN 50438*, EN 50549-1*, ENA/EEA, G98, G99, IFS2018, IEC 61727, IEC 62116, RD 1699, RFG, TOR Erzeuger, UNE 206006 IN, UNE 206007-1 IN, UTE C15-712-1, VDE 0126-1-1, VDE-AR-N 4105, VJV2018 (*Does not apply to all national annexes to EN 50438)							

[1] Overvoltage category II (DC input): The device is suitable for connection to PV strings. Long feed cables out of doors or a lightning protection system in the vicinity of the PV system, may make lightning protection or surge protection equipment necessary.

[2] Overvoltage category III (AC output): The device is suitable for permanent connection in the grid distribution behind the meter and the line protection fuse. When the connection line travels outdoors over long distances, overvoltage protection devices may be necessary.

[3] Contamination degree 4: Contamination results in continuous conductivity, e.g. due to conductive dust, rain or snow; indoors or outdoors.

[4] Automatic disconnection device to VDE V 0126-1-1, for Austria: The inverter is equipped "With automatic disconnection device in accordance with ÖVE/ÖNORM E 8001-4-712".

[5] MPP range 120V...180V (with limited current of 9.5-13A) to 680V...720V (with limited current of 11A). A detailed layout should be produced using the KOSTAL (PIKO) Solar Plan user software.

[6] Measured under rated power at an ambient temperature of 23 ° C. With unfavorable string connection or higher ambient temperature, the noise emission can reach up to 48 dB (A).

© 2020 KOSTAL Solar Electric GmbH

11.2 Block diagram

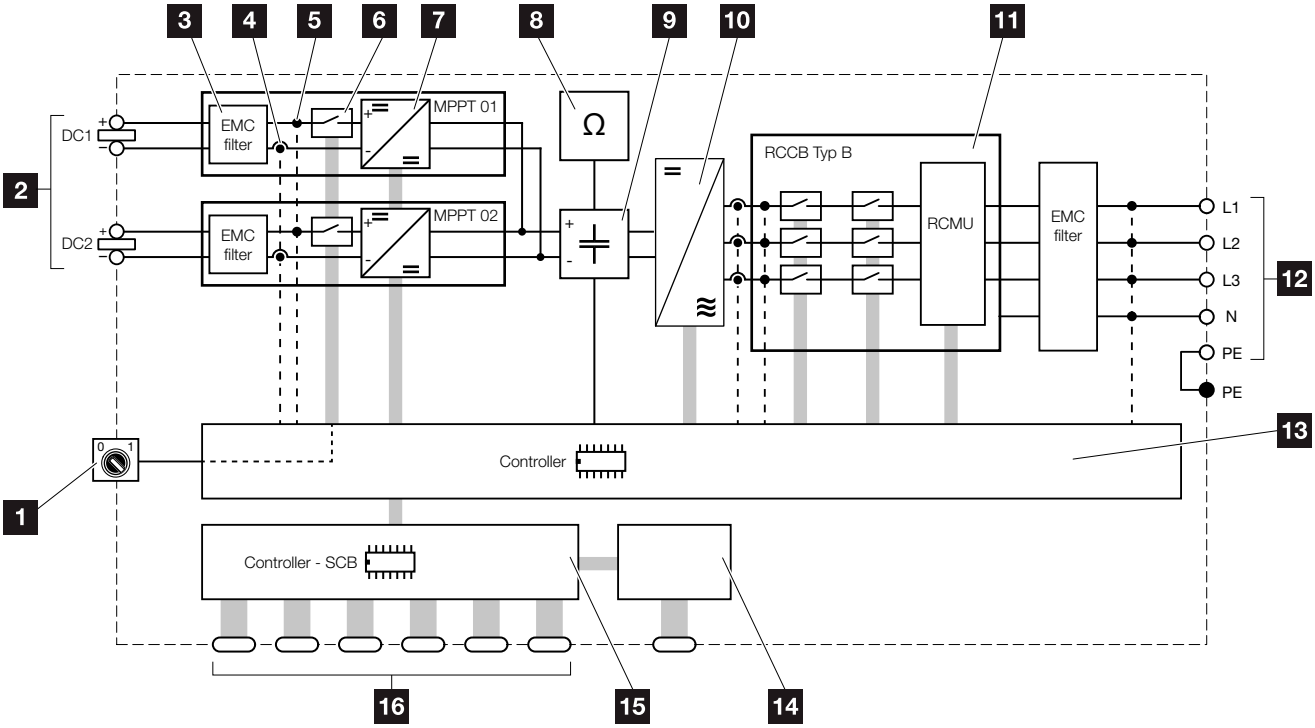

Fig. 68: Block diagram

1. DC switch
2. PV strings
3. Electromagnetic compatibility (EMC) filter
4. Current measuring point
5. Voltage measuring point
6. Electronic DC disconnection device
7. DC regulator
8. Insulation monitoring
9. Intermediate circuit
10. Inverter bridge
11. Grid monitoring and shut-down
12. 3-phase AC output
13. System control with MPP trackers
14. Display
15. Smart Communication Board (SCB)
16. Interfaces (e.g. Ethernet, USB, energy meter)

© 2020 KOSTAL Solar Electric GmbH

12. Accessories

12.1 KOSTAL (PIKO) Solar Portal 187

12.2 KOSTAL Solar App 188

12.3 PIKO M2M Service 189

© 2020 KOSTAL Solar Electric GmbH

12.1 KOSTAL (PIKO) Solar Portal

The KOSTAL (PIKO) Solar Portal makes it possible to monitor the operation of the inverters via the Internet. You can register for the KOSTAL (PIKO) Solar Portal for no charge on our website.

The portal code for the KOSTAL (PIKO) Solar Portal (www.kostal-solar-portal.de) is P3421.

You can find additional information about this product on our website **www.kostal-solar-electric.com** in the category **Service & Products > Monitoring**.

© 2020 KOSTAL Solar Electric GmbH

12.2 KOSTAL Solar App

The free KOSTAL Solar App provides you with a way of professionally monitoring your photovoltaic system. You can use the KOSTAL Solar App to simply and easily access all functions on your smartphone or tablet at any time.

To set up and use the app, you will need access to the KOSTAL (PIKO) Solar Portal and to have an inverter set up there. You will need the access data used for the KOSTAL (PIKO) Solar Portal to log into the app.

You can use the KOSTAL Solar App to easily monitor your photovoltaic system and to display relevant system data both when you are out and about and at home. It allows you to access the consumption and generation data over various time periods, such as day, week, month and year, and to access the historical data of your photovoltaic system. So you are always up-to-date with the KOSTAL Solar App.

Download the free KOSTAL Solar App today and benefit from new and advanced functionalities.

You can find additional information about this product on our website **www.kostal-solar-electric.com** under the category **Products > Monitoring**.

© 2020 KOSTAL Solar Electric GmbH

12.3 PIKO M2M Service

The PIKO M2M Service allows KOSTAL customers to monitor a PV system using a mobile link to the KOSTAL (PIKO) Solar Portal. for continuous system monitoring.

A secure and encrypted VPN connection, which only allows communication between inverters and the KOSTAL (PIKO) Solar Portal, protects the user against misuse and excessive costs.

The 5-year package price involves no monthly costs, reducing administration and
assuring smooth monitoring for a period of at least five years. Two different packages are available depending on the size of the system.

You can find additional information about this product on our website **www.kostal-solar-electric.com** in the category **Service & Products > Monitoring**.

© 2020 KOSTAL Solar Electric GmbH

13. Appendix

13.1 Type plate 191

13.2 Warranty and service 192

13.3 Handover to the operator 193

13.4 Decommissioning and disposal 194

© 2020 KOSTAL Solar Electric GmbH

13.1 Type plate

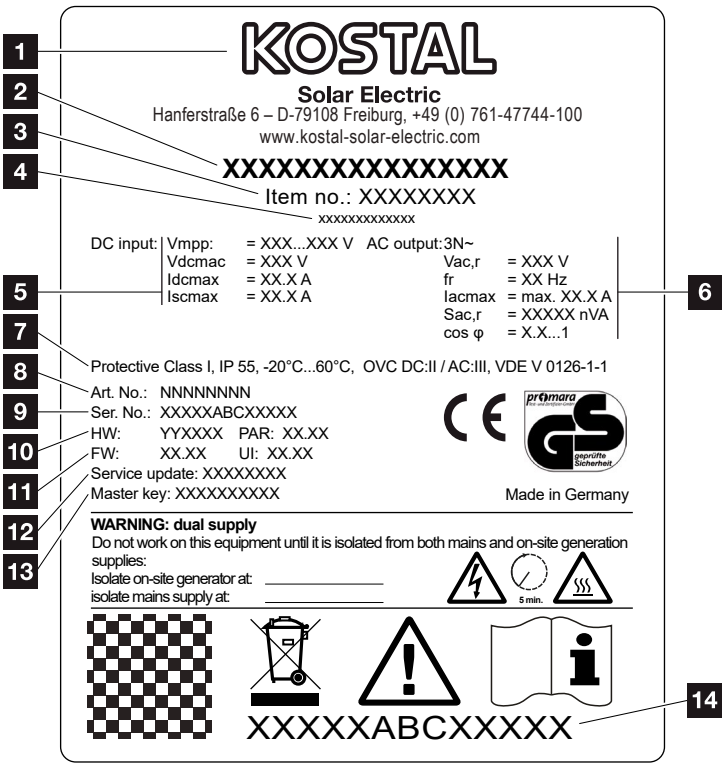

Fig. 69: Type plate

The type plate is located on the inverter. You will find the device type and the most important technical data listed on the type plate.

1. Name and address of manufacturer
2. Device type
3. Article number
4. Additional designation (e.g. service device)
5. Details of the DC input:
   - MPP control range
   - max. DC input voltage
   - max. DC input current
   - max. DC short-circuit current
6. Details of the AC output:
   - number of feed-in phases
   - output voltage (nominal)
   - grid frequency
   - max. AC output current
   - max. AC power
   - setting range of power factor
7. Protective class in accordance with IEC 62103, protection class, ambient temperature range, overvoltage category, requirements with which the integrated grid monitoring complies
8. Internal article number
9. Serial number
10. Version number of hardware, version number of parameter set
11. Version number of the firmware, version number of the user interface of the device
12. Date of last update (only for service devices)
13. Master key password for installer's Webserver login
14. Removable warranty label

13.2 Warranty and service

The warranty period for the inverter is 2 years from the date of purchase. If you register the inverter with the KOSTAL Solar online shop within the first 6 months from the date of purchase, you can extend this free of charge to our KOSTAL 5-year Smart Warranty.

You can find more information about the service and warranty conditions for your inverter in the download area for the product on our website at **www.kostal-solar-electric.com**.

For service information and a possible subsequent shipment of parts, we require your device type and the serial number. You will find this information on the type plate on the exterior of the housing.

If parts are required, use only original replacement parts.

If you have any technical questions, please call our service hotline:

- Germany and other countries[1]
  +49 (0)761 477 44 - 222
- Switzerland
  +41 32 5800 225
- France, Belgium, Luxembourg
  +33 16138 4117
- Greece
  +30 2310 477 555
- Italy
  +39 011 97 82 420
- Spain, Portugal[2]
  +34 961 824 927
- Turkey[3]
  +90 212 803 06 26

[1] Language: German, English

[2] Language: Spanish, English

[3] Language: English, Turkish

© 2020 KOSTAL Solar Electric GmbH

13.3 Handover to the operator

Following successful installation and commissioning, all documents are to be handed over to the operator. The operator must be made aware of the following points:

- Position and function of the DC switch
- Position and function of the AC line circuit breaker
- Safety when handling the device
- Appropriate procedure when checking and servicing the unit
- Meaning of the LEDs and the display messages
- Contact person in the event of a fault
- The provision of system and inspection documentation in accordance with DIN EN 62446 (VDE 0126-23) (optional).

© 2020 KOSTAL Solar Electric GmbH

13.4 Decommissioning and disposal

To disassemble the inverter, proceed as follows:

1. De-energise inverter on AC and DC side.
   Ch. 4.3
2. Open the inverter cover.
3. Loosen terminals and cable glands.
4. Remove all DC and AC lines and communication cables.
5. Close the inverter cover.
6. Loosen the screw underneath the inverter.
7. Loosen screws on top of inverter.
8. Lift the inverter off the wall.

DANGER

RISK OF DEATH DUE TO ELECTRICAL SHOCK AND DISCHARGE!

De-energise device and secure against being switched on again.
Ch. 4.3

Proper disposal

Electronic equipment labelled with a dustbin with a line through it, may not be disposed of with household waste. This equipment can be handed in to waste collection points free of charge.

Find out about the local requirements for the separate collection of electrical and electronic equipment in your country.

© 2020 KOSTAL Solar Electric GmbH

Index

A

Accessories 186
Active power control 143, 146, 150

B

Block diagram 185

C

Cable 183
Calling up Webserver 103
Control buttons 26
Current operating manual 12

D

Data export 138, 139
DC cables 59, 61, 194
DC connections 44, 61, 71
DC switch 23, 62, 68, 69, 70, 166, 185
DHCP server 119
Display 42, 62, 72, 73, 74, 75, 171
Disposal 194

E

EMS 28
Ethernet 52, 55, 57, 96, 97, 98
Ethernet cable 98
EU declarations of conformity 11

F

Faults 136
Firmware 191

G

Grid monitoring 136, 191

© 2020 KOSTAL Solar Electric GmbH

H

Hotline 7, 192

I

Initial commissioning 62
Inputs 180
Interfaces 183
IP address 95, 104, 119, 146, 150

L

LAN 95
Language 2
Line circuit breaker 44, 62, 68, 70
Log data 116, 134, 137, 138

M

Menu 73, 84

N

Notes 12, 14, 17

O

Open the inverter cover 96, 98, 194
Operation 73
Operational statuses 75

P

Plant configuration 122
Proper use 8
Proxy server 95
PV generator 182

© 2020 KOSTAL Solar Electric GmbH

R

Ripple control receiver 52, 53, 54, 117

S

Safety instructions 14
Saving interval 34
Scope of delivery 40
Self-consumption 8, 124, 125, 136, 152, 154, 156, 157, 158, 159, 161
Self-consumption control 125, 155, 157
Settings 26, 72, 82, 95, 98, 104, 139
Solar portal 138
Spring-loaded terminal strips 47
Storage 39
Strings 60, 62, 68, 69, 136
Switched output 155, 156

T

Technical data 180
Terminal 46, 53, 154
Transport 39
Type plate 171, 191, 192

W

Wall mount 43
Warnings 15
Warranty 9, 59, 192
Webserver 33, 96, 101, 102, 103, 117, 155

© 2020 KOSTAL Solar Electric GmbH

KOSTAL Solar Electric GmbH
Hanferstr. 6
79108 Freiburg i. Br.
Deutschland
Telefon: +49 761 47744 - 100
Fax: +49 761 47744 - 111

KOSTAL Solar Electric Ibérica S.L.
Edificio abm
Ronda Narciso Monturiol y Estarriol, 3
Torre B, despachos 2 y 3
Parque Tecnológico de Valencia
46980 Valencia
España
Teléfono: +34 961 824 - 934
Fax: +34 961 824 - 931

KOSTAL Solar Electric France SARL
11, rue Jacques Cartier
78280 Guyancourt
France
Téléphone: +33 1 61 38 - 4117
Fax: +33 1 61 38 - 3940

KOSTAL Solar Electric Hellas E.Π.E.
47 Steliou Kazantzidi st., P.O. Box: 60080
1st building – 2nd entrance
55535, Pilea, Thessaloniki
Ελλάδα
Τηλέφωνο: +30 2310 477 - 550
Φαξ: +30 2310 477 - 551

KOSTAL Solar Electric Italia Srl
Via Genova, 57
10098 Rivoli (TO)
Italia
Telefono: +39 011 97 82 - 420
Fax: +39 011 97 82 - 432

www.kostal-solar-electric.com

09/2020 - EN - DOC02138752-0001 - Subject to technical changes, errors excepted.
You can find current information at www.kostal-solar-electric.com. Manufacturer: KOSTAL Industrie Elektrik GmbH, Hagen, Germany